TECHNICAL SPECIFICATIONS

Section Number	Title
01040	SUMMARY OF WORK
01055	CONSTRUCTION STAKING
01060	CODES AND STANDARDS
01300	SUBMITTALS
01500	CONSTRUCTION FACILITIES AND TEMPORARY CONTROLS
01501	FIELD OFFICES AND TEMPORARY UTILITIES
01610	TRANSPORTATION AND HANDLING
01620	STORAGE AND PROTECTION
01625	GENERAL EQUIPMENT AND REQUIREMENTS
01700	CONTRACT CLOSEOUT
01710	CLEANING
01720	RECORD DOCUMENTS
01740	WARRANTIES AND BONDS
02000	GENERAL CONSTRUCTION REQUIREMENTS
02100	SITE PREPARATION
02125	EROSION CONTROL FOR INFRASTRUCTURE PROJECTS
02602	SANITARY SEWER MATERIALS
02612	SANITARY SEWER CONSTRUCTION
02936	GRASSING
03100	CONCRETE FORMWORK
03200	CONCRETE REINFORCEMENT
03250	CONCRETE JOINTS AND JOINT ACCESSORIES
03300	CAST IN PLACE CONCRETE
03350	CONCRETE FINISHES
03600	GROUT
04200	MASONRY
05120	STRUCTURAL STEEL
05500	MISCELLANEOUS METALS
06100	CARPENTRY WORK
07412	STANDING SEAM METAL ROOF
07620	SHEET METAL FLASHING AND TRIM
07900	JOINT SEALANTS
08110	STEEL DOORS AND FRAMES
08331	OVERHEAD COILING DOORS
08710	DOOR HARDWARE
08800	GLAZING
09260	GYPSUM BOARD ASSEMBLIES
09511	ACOUSTICAL PANEL CIELINGS
10522	FIRE EXTENGUISHERS AND ACCESSORIES
10650	BATHROOM ACCESSORIES
12121	PRE-ENGINEERED METAL BUILDING
15095	VALVES, HYDRANTS, APPURTENANCES AND STORM PIPE
26 05 02	BASIC ELECTRICAL REQUIREMENTS
26 05 05	CONDUCTORS
26 05 43	UNDERGROUND DUCTS AND RACEWAYS FOR ELECTRICAL SYSTEMS
26 05 53	IDENTIFICATION FOR ELECTRICAL SYSTEMS
26 22 13	LOW VOLTAGE DISTRIBUTION TRANSFORMERS
26 24 16	PANELBOARDS
28 31 11	DIGITAL ADDRESSABLE FIRE ALARM SYSTEM

ATTACHMENTS

- GEOTECHNICAL REPORT PREPARED BY UNITED CONSULTING DATED 11/05/2018

SECTION 01040
SUMMARY OF WORK

1 GENERAL

1.1 DEFINITIONS

A. Definitions for common terms used in these documents are provided in Article 1, General Conditions/Supplemental Conditions.

1.2 SUMMARY

A. The work to be performed consists of furnishing all labor, equipment, tools and materials required to construct the Gees Mill Water Treatment Plant (WTP) Maintenance Building and associated utilities, as set forth in the Bid Form, as shown on the Drawings and as specified herein. In general, the work includes construction of an approximately 50’ x 100’ pre-engineered metal building with standing seam metal roof and required site work.

1.3 GEES MILL WTP MAINTENANCE BUILDING

A. The Gees Mill WTP where this project is located is near the eastern border of Rockdale County, located at 3090 Gees Mill Road, Conyers, GA 30013. The purpose of this maintenance building is to provide additional offices and work space for the operations and maintenance of the Gees Mill WTP. The Work at the Gees Mill WTP Maintenance Building can generally be described as consisting of:

1. Site preparation including clearing and grubbing, grading, and erosion, sedimentation and pollution control.
2. Preparation of subgrades and foundation support, including the removal of unsuitable materials.
3. Provide and Install:
   a. Pre-engineered metal building with standing seam metal roof and site pad
   b. Bathroom and associated plumbing.
   c. Heating and Ventilation System
   d. Electrical and control system.
   e. Yard utility piping and structures.
4. Site improvements including modifications to detention pond, installation of driveway and lighting.

1.4 STATUS OF PERMITS AND EASEMENTS

A. Permits for land disturbance and encroachment into public right-of-way expected to be obtained before the 60-day period expires after the bid opening. All required easements have been obtained.

** END OF SECTION **

SECTION 01055
CONSTRUCTION STAKING

1 GENERAL

1.1 SCOPE OF WORK

A. Contractor's surveying and engineering responsibilities during the construction phase shall include the following:

1. Field surveying and engineering services required to supplement Contract Documents during construction of the Project. The Contractor shall employ qualified personnel acceptable to the Engineer to provide construction staking and shall furnish documentation confirming that staking is being performed to the lines and grades shown in the Contract Documents. Construction staking will include all the surveying work required to lay out the work and control the location, elevation and position of the finished construction in accordance with the contract documents. Contractor's surveyor shall maintain a complete, accurate log of all control and survey work as it progresses and shall periodically furnish copies of same to Engineer as the work progresses. Surveyor shall be registered in the State of Georgia.
2. Civil, structural or other professional engineering services specified, or required to execute Contractor's construction methods.
3. The contractor shall locate and protect control points prior to starting site work and preserve all permanent reference points during construction. Contractor's surveyor shall replace any control points that are lost or destroyed during construction.
4. As-built plans of all construction shall be maintained by the Contractor and delivered to the Engineer at the completion of construction in a form that is acceptable to the Owner.

B. Owner's responsibilities during the construction phase shall include the following:

1. The Owner will furnish Contract Documents including plan drawings with sufficient detail and geometric references to allow the Contractor to accurately construct the work.

** END OF SECTION **

SECTION 01060
CODES AND STANDARDS

1 GENERAL

1.1 DESCRIPTION

A. Whenever reference is made to conforming to the standards of any technical society, organization, body, code or standard, it shall be construed to mean the latest standard, code, specification adopted and published at the time of opening of Bids. This shall include the furnishing of materials, testing of materials, fabrication and installation practices.

B. The inclusion of an organization under one category does not preclude that organization's standards from applying to another category.

C. In addition, all work shall comply with the applicable requirements of local codes, utilities and other authorities having jurisdiction.

D. The standards which apply to this Project are not necessarily restricted to those organizations which are listed in Article 1.2.

1.2 STANDARD ORGANIZATIONS

A. Piping and Valves

1. ACPA American Concrete Pipe Association
2. ANSI American National Standards Institute
3. ASME American Society of Mechanical Engineers
4. AWWA American Water Works Association

B. Materials

1. AASHTO American Association of State Highway and Transportation Officials
2. ANSI American National Standards Institute
3. ASTM American Society for Testing and Materials

C. Steel and Concrete

1. ACI American Concrete Institute
2. AISC American Institute of Steel Construction, Inc.
3. AISI American Iron and Steel Institute
4. CRSI Concrete Reinforcing Steel Institute
5. NRMA National Ready-Mix Association
6. PCA Portland Cement Association
7. PCI Prestressed Concrete Institute
8. SSPC Structural Steel Painting Council

D. Welding

1. AWS American Welding Society
2. NACE National Association of Corrosion Engineers

E. Government and Technical Organizations

1. CFR Code of Federal Regulations
2. CSI Construction Specifications Institute
3. FS Federal Specifications
4. ISO International Organization for Standardization

5. OSHA Occupational Safety and Health Administration
6. SBC Standard Building Code

F. Roadways

1. DOT Department of Transportation
2. SSRBC Standard Specifications for Road and Bridge Construction, Georgia Department of Transportation

1.3 DEFINITIONS

A. As Directed, as Required, Etc.

1. Wherever in the Contract Documents, or on the Drawings, the words "as directed," "as ordered," "as requested," "as required," "as permitted," or similar words are used, it shall be understood that the direction, order, request, requirement, or permission of the Engineer is intended. Similarly, the words "approved," "acceptable," "suitable," "satisfactory" and similar words shall mean approved by, acceptable to, suitable to, or satisfactory to the Engineer.

B. Provide

1. Wherever in the Contract documents the word "provide" is used, it shall mean to furnish (or supply) and install.

2 PRODUCTS (NOT USED)

3 EXECUTION (NOT USED)

** END OF SECTION **

SECTION 01300
SUBMITTALS

1 GENERAL

1.1 DESCRIPTION

A. The work under this Section includes submittals by CONTRACTOR of shop drawings, product data and samples required by the various sections of these Specifications to the ENGINEER.

B. Definitions: Submittals are categorized as follows:

1. Shop Drawings

   a. Shop drawings shall include technical data, fabrication and erection/installation drawings, drawings, diagrams, procedure and methodology, performance curves, schedules, templates, patterns, test reports, calculations, instructions, measurements and similar information as applicable to the specific item for which the shop drawing is prepared.

   b. Provide newly prepared information with graphic information at accurate scale (except as otherwise indicated) or appropriate number of prints hereof, with name or preparer (firm name) indicated. Show dimensions and note, which are based on field measurement. Identify materials and products in the work shown. Indicate compliance with standards and special coordination requirements. Do not allow shop drawing copies without appropriate final "Action" markings by the ENGINEER to be used in connection with the Work.

   c. Drawings shall be presented in a clear and thorough manner. Details shall be identified by reference to sheet and detail, specification section or schedule shown on the Drawings.

2. Product Data

   a. Product data includes standard printed information on materials, products and systems, not specially prepared for this Project, other than the designation of selections from among available choices printed therein.

   b. Collect required data into one submittal for each unit of work or system and mark each copy to show which choices and options are applicable to the Project. Include manufacturer's standard printed recommendations for application and use, compliance with standards, application of labels and seals, notation of field measurements which have been checked and special coordination requirements.

1.2 MANUFACTURER'S LITERATURE

A. Where content of submitted literature from manufacturers includes data not pertinent to this submittal, clearly indicate which portion of the contents is being submitted for the ENGINEER's review.

B. Submit the number of copies which are required to be returned plus four copies which will be retained by the ENGINEER.

C. Submit all samples in the quantity which is required to be returned plus one sample which will be retained by the ENGINEER.

1.3 COLORS

A. Unless the precise color and pattern is specifically described in the Contract Documents, wherever a choice of color or pattern is available in a specified product, submit accurate color charts and pattern charts to the ENGINEER for review and selection.

B. Unless all available colors and patterns have identical costs and identical wearing capabilities, and are identically suited to the installation, completely describe the relative costs and capabilities of each.

1.4 GENERAL SUBMITTAL REQUIREMENTS

A. Scheduling

1. Where appropriate in various required administrative submittals (listings of products, manufacturers, supplier and subcontractors, and in job progress schedule), show principal work-related submittal requirements and time schedules for coordination and integration of submittal activity with related work in each instance.

B. Coordination of Submittal Times

1. Prepare and transmit each submittal to the Engineer sufficiently in advance of performing related work or other applicable activities, so the installation will not be delayed or improperly sequenced by processing times, including non-approval and re-submittal (if required). Coordinate with other submittals, testing, purchasing, delivery and similar sequenced activities. No extension of time will be authorized because of Contractor's failure to transmit submittals to the Engineer sufficiently in advance of the work.

C. Sequencing Requirements

1. As applicable in each instance, do not proceed with a unit of work until submittal procedures have been sequenced with related units of work, in a manner which will ensure that the action will not need to be later modified or rescinded by reason of a subsequent submittal which should have been processed earlier or concurrently for coordination.

D. Preparation of Submittals

1. Provide permanent marking on each submittal to identify project, date, Contractor, subcontractor, submittal name and similar information to distinguish it from other submittals. Show Contractor's executed review and approval marking and provide a 3” x 5” space for the Engineer's "Action" marking. Package each submittal appropriately for transmittal and handling. Submittals which are received from sources other than through the Contractor's office will be returned "without action."

E. Transmittal Identification

1. Number transmittals in sequence for each Division of the Specifications. The number before the dash indicates the Section of the Specifications, and the number after the dash is the sequence number of the transmittal (15140-1 would be the first transmittal applicable to Section 15140 of the Specifications, 15140-2 would be the second transmittal for Section 15140, etc.)

2. Identify re-submittals with a letter of the alphabet following the original number, using “A” for the first re-submittal, “B” for the second re-submittal, etc. A re-submittal affecting transmittal 15140-1 would then be numbered 15140-1A. The number 15140-1 would then be entered in the space "Previous Transmittal Number," which is left blank except on re-submittals. Re-submittals shall include all previous submittal information. No partial submittals will be accepted.

1.5 ROUTING OF SUBMITTALS

A. Submittals and routine correspondence shall be routed as follows:

1. Supplier to Contractor (through representative if applicable) for preliminary check.

2. Contractor to Consulting Engineer for general review or comment.

3. Consulting Engineer to Contractor.

4. Contractor to Supplier.

1.6 ADDRESS FOR COMMUNICATIONS

A. Rockdale Water Resources
Attn: Mr. David Cervone, P.E.
1329 Portman Drive, Suite H
Conyers, GA 30012
(770) 278-7432

1.7 SUBMITTAL COPIES REQUIRED

A. Shop Drawings, Product Data, and Miscellaneous Submittals

1. All submittals marked "No Exception Noted" or "Furnish as Corrected" will be distributed as follows:

a.	For Engineer	1 copy
b.	For Contractor	2 copies
c.	For Field Inspection Office	1 copy
d.	For Owner	1 copy
e.	Total	5 copies

2. To the above number may be added additional copies as required by the Contractor.

3. The Engineer will mark all copies of each shop drawing. One will be retained in the Engineer's office, one sent to the Field Inspection office, one will be retained for the Owner and the remaining copies sent to the Contractor for his records and distribution.

4. All submittals marked “Revise and Resubmit” or “Rejected” will be distributed as follows:

a.	For Engineer	1 copy
b.	For Contractor	2 copies
c.	Total	3 copies

B. For non-approval items, such as parts lists and preliminary operation and maintenance manuals, 2 copies are required, unless specified otherwise:

1.	For Engineer File	1 copy
2.	For Contractor	1 copy
3.	Total	2 copies

C. Samples

1. Submittal

a. At Contractor's option, provide preliminary submittal of a single set of samples for the Engineer's review and "action." Otherwise, initial submittal is final submittal unless returned with "action" which requires re-submittal. Submit two sets of samples in final submittal; one set will be returned.

2. Quality Control Set

a. Maintain returned final set of samples at project site, in suitable condition and available for quality control comparisons by Engineer and by others.

1.8 REVIEW OF SUBMITTALS

A. Review Time

1. Allow 15 working days from the date the submittal is received in the Engineer’s office for the Engineer to review and respond to each submittal, except allow longer periods where processing must be delayed for coordination with subsequent submittals. The Engineer will advise the Contractor promptly when it is determined that a submittal being processed must be delayed for coordination.

B. Engineer's Action

1. “No Exception Noted” - Indicates the drawings have been reviewed for conformance with the contract documents and no exceptions have been taken. Proceed with the work.

2. “Furnish as Corrected” - Indicates the drawings have been reviewed for conformance with the contract documents and work may proceed in accordance with all comments. Re-submittal will not be required.

3. “Revise and Resubmit” - Indicates the drawings have been reviewed for conformance with the contract documents, and work may not proceed. After items to which exceptions have been taken are corrected, Contractor shall again submit copies for review.
4. “Rejected” - Indicates the drawings have been reviewed for conformance with the contract documents and are too incomplete or in an unacceptable condition for review. A notation will be made on the shop drawings as to the exceptions taken. Drawings shall be revised and resubmitted for review before proceeding with the work.
5. “Submit Specific Item” - Indicates that one or more items in the submittal were missing or incomplete. Work may commence on any items to which no exceptions were taken; missing or incomplete items must be submitted as noted.

1.9 DAILY REPORTS

A. The Contractor shall submit daily reports to the Engineer. Reports shall contain, but not be limited to, a list of all employees and subcontractors by trade that worked on the job that day, received equipment and materials, survey stake-out data, erosion control maintenance updates.

2 EXECUTION

2.1 CONTRACTOR'S COORDINATION OF SUBMITTALS

A. Prior to submittal for the ENGINEER review, the CONTRACTOR shall use all means necessary to fully coordinate all material, including the following procedures:
   1. Determine and verify all field dimensions and conditions, catalog numbers and similar data.
   2. Coordinate as required with all trades and all public agencies involved.
   3. Submit a written statement of review and compliance with the requirements of all applicable technical Specifications as well as the requirements of this Section.
   4. Clearly indicate in a letter or memorandum on the manufacturer's or fabricator's letterhead, all deviations from the Contract Documents.

B. Each and every copy of the submittal data shall bear the CONTRACTOR's stamp showing that it has been so checked. Shop drawings submitted to the ENGINEER without the CONTRACTOR's stamp will be returned to the CONTRACTOR for conformance with this requirement.

C. The OWNER may deduct from the Contract amount costs associated with having to review a particular shop drawing, product data, or sample more than two times in order to receive an acceptable disposition.

D. Grouping of Submittals
   1. Unless otherwise specifically permitted by the ENGINEER, make all submittals in groups containing all associated items.
   2. No review will be given to partial submittals of shop drawings for items which interconnect and/or are interdependent. It is the CONTRACTOR's responsibility to assemble the shop drawings for all such interconnecting and/or interdependent items, check them and then make one submittal to the ENGINEER along with CONTRACTOR's comments as to compliance, non-compliance or features requiring special attention.

E. Transmittal of Submittals
   1. All submittals shall be submitted using a transmittal form similar to one furnished by the ENGINEER.

F. Shop Drawing Details
   1. All details on shop drawings shall show clearly the relation of the various parts of the main members and lines of the structure. Where correct fabrication of the work depends upon

field measurements, such measurements shall be made and noted on the drawings before being submitted for review.

G. Deviations

1. If a shop drawing shows any deviation(s) from the requirements of the Contract Documents, the CONTRACTOR shall make specific mention of the deviation(s) on the transmittal form and provide a written description of the deviation(s) on separate 8-1/2 X 11 paper attached to the transmittal form.

H. Maintenance and Lubrication Schedules

1. Submittals for equipment specified under Divisions 11, 13, 14, 15, and 16 shall include maintenance and lubrication schedules for each piece of equipment.

2. Schedule of Submittals: As detailed in the General Conditions. The schedule shall provide for submittal of items which relate to one another to be submitted concurrently.

2.2 CONTRACTOR CERTIFICATION

A. Each shop drawing, sample, and product data submitted by the CONTRACTOR shall have affixed to it the following certification statement:

B. Certification Statement: By this submittal, I hereby represent that all field measurements, field construction criteria, materials, dimensions, catalog numbers and similar data have been determined and verified, and each item has been checked and coordinated with other applicable shop drawings and all Contract requirements. Further, these determination, verification, check, and coordination activities have been conducted by qualified personnel under my supervision.

2.3 TIMING OF SUBMITTALS

A. Make all submittals in advance of scheduled dates for installation to provide all required time for reviews, for securing necessary reviews, for possible revision and resubmittal, and for placing orders and securing delivery.

B. In scheduling, allow 10 working days for the ENGINEER's review following the receipt of the submittal.

1. Acceptable submittals will be marked "No Exceptions Taken". Three copies will be retained by the ENGINEER for ENGINEER's and the OWNER's use and the remaining copies will be returned to the CONTRACTOR.

2. Submittals requiring minor corrections before the product is acceptable will be marked "Make Corrections Noted". The CONTRACTOR may order, fabricate, ship, and install the items included in the submittals, provided the indicated corrections are made. Resubmission is not required on a "Make Corrections Noted" submittal disposition.

3. Submittals marked "Amend and Resubmit" must be revised to reflect required changes and the initial review procedure must be repeated.

4. The "Rejected" notation is used to indicate products which are not acceptable. Upon return of a submittal so marked, the CONTRACTOR shall repeat the initial review procedure utilizing acceptable products.

5. Only three copies of items marked "Amend and Resubmit" and “Rejected" will be reviewed and marked. One copy will be retained by the ENGINEER and the other two copies will be returned to the CONTRACTOR for resubmittal.

C. No work or products shall be installed without a drawing or submittal bearing either the "No Exceptions Taken" or "Make Corrections Noted" notation. The CONTRACTOR shall maintain at the job site a complete set of shop drawings bearing the ENGINEER's stamp. Fabrication performed, materials purchased or on-site construction accomplished which does not conform with a properly and completely processed submittal shall be remedied by the CONTRACTOR with no liability to the OWNER. The OWNER will not be liable for any expense or delay due to corrections or remedies required to accomplish conformity. Project work, materials, fabrication, and installation shall conform with properly and completely processed shop drawings, applicable samples, and/or product data.

D. Substitutions: In the event the CONTRACTOR obtains the ENGINEER's approval for the use of products other than those which are listed first in the Contract Documents, the CONTRACTOR shall, at the CONTRACTOR's own expense and using methods approved by the ENGINEER, make any changes to structures and piping that may be necessary to accommodate these products.

E. Use of the "No Exceptions Taken" or "Make Corrections Noted" notation on shop drawings or other submittals is general and shall not relieve the CONTRACTOR of the responsibility of furnishing products of the proper dimension, size, quality, quantity, materials and all performance characteristics, to efficiently perform the requirements and intent of the Contract Documents. The ENGINEER's review is intended only to review conformance with the design concept of the Project and compliance with the information given in the Contract Documents. The CONTRACTOR is responsible for dimensions to be confirmed and correlated at the job site. The CONTRACTOR is also responsible for information that pertains solely to the fabrication processes or to the technique of construction and for the coordination of the work of all trades.

** END OF SECTION **

SECTION 01500
CONSTRUCTION FACILITIES AND TEMPORARY CONTROLS

1 GENERAL

1.1 SCOPE

A. Temporary facilities required for this work include, but are not necessarily limited to:

1. Temporary utilities required by CONTRACTOR such as water, telephone, and electricity.
2. Sanitary facilities.
3. Temporary enclosures and construction facilities.

1.2 GENERAL

A. Sanitary facilities and potable water shall be made available by the CONTRACTOR on the Project site on the first day that any activities are conducted on site. The other facilities shall be provided as the schedule of the Project warrants.

B. Maintenance: Use all means to maintain temporary facilities in proper and safe condition throughout progress of the Work. In the event of loss or damage, immediately make all repairs and replacements necessary, at no additional cost to the OWNER.

C. Removal: Remove all such temporary facilities and controls as appropriate relative to the progress of the Work, and as the requirements of the Contract provide.

1.3 TEMPORARY UTILITIES

A. General

1. Provide and pay all costs for electricity and sanitary utilities required for the performance of the Work.
2. If water service is available to the site at the time of construction, OWNER will provide tap and meter at the curb and CONTRACTOR will provide service line and pay for water at standard local rates.

1.4 CONTRACTOR’S USE OF PREMISES

A. Lands furnished by OWNER upon which CONTRACTOR and their respective Subcontractors shall perform the Work are as shown in the Contract Drawings.

1. CONTRACTOR shall coordinate use of premises with the OWNER. The CONTRACTOR shall be responsible for all site activities conducted under the terms of this contract and/or under their purview.

1.5 PERMITS

A. Permits, Licenses, or Approvals: The CONTRACTOR will be responsible for acquiring any permits that are required for this project/purchase. OWNER will waive fees on all permits issued by OWNER.

B. The OWNER will obtain permits required from agencies of the State of Georgia and the United States of America.

1.6 PROTECTION OF WORK AND PROPERTY

A. Comply with applicable Federal, State, and Local health, safety and environmental laws pertinent to this Work, or referenced by the Contract provisions, while on OWNER's property.

B. During the performance of the Work, CONTRACTOR is responsible for adapting his means, methods, techniques, sequences and procedures of construction to allow effective and timely prosecution of the Work. In order to accomplish this, it may be necessary for the CONTRACTOR to plan, design, and provide various temporary services, utilities, temporary piping and heating, access, and similar items which will be included within the Contract Price.

1.7 VEHICULAR TRAFFIC

A. CONTRACTOR's vehicular traffic must comply with OWNER's requirements. CONTRACTOR will coordinate vehicular traffic in a manner that will maximize overall access to the site and avoid interference with other CONTRACTORs working at the site.

1.8 PROJECT SIGN

A. Should the CONTRACTOR desire to post their business name for delivery purposes, the CONTRACTOR may place an appropriately sized sign near project access points.

2 EXECUTION

2.1 RESPONSIBILITIES

A. CONTRACTOR shall provide temporary facilities and controls as specified throughout this Section for use by CONTRACTOR's personnel at the site, or sites of the Work, until the project is complete.

B. CONTRACTOR is solely responsible for temporary facilities and controls removal and restoration of the affected area when the temporary facilities and controls are no longer needed or required by virtue of the Work being complete.

C. CONTRACTOR shall include in his Bid the costs associated with the temporary facilities and controls that are to be provided.

2.2 STORAGE YARDS AND BUILDINGS

A. Temporary Storage Yards: CONTRACTOR may construct temporary storage yards for staging and storage of its own products, equipment, and materials. Location is subject to ENGINEER's approval.

B. Temporary Storage Trailers: Trailers may be utilized for temporary storage. Location is subject to ENGINEER's approval.

2.3 SITE ACCESS

A. General access to the site will be from Gees Mill Rd.

2.4 SITE SECURITY

A. The CONTRACTOR shall be responsible for security of their temporary facilities, equipment, tools, vehicles, materials, work-in-place, and any other property located on site for the duration of this Contract.

B. The CONTRACTOR shall remove all temporary facilities, equipment, tools, vehicles, materials, and any other property remaining upon completion of the Work, and no later than close-out of the Contract.

C. Coordination: Coordinate traffic routing with that of others working in the same or adjacent areas.

2.5 CLEANING DURING CONSTRUCTION

A. The site shall be maintained in a neat, clean, and orderly manner to allow and ensure ready access, safe working and observation conditions, and a workmanlike appearance. Debris, waste materials, refuse, and rubbish shall be collected and properly disposed of daily.

** END OF SECTION **

SECTION 01501
FIELD OFFICES AND TEMPORARY UTILITIES

1 GENERAL

1.1 SCOPE

A. The Contractor shall provide temporary facilities and utilities as required for execution of the work and as described herein. This shall include, but are not necessarily limited to the following.

1. Temporary water and electricity shall be provided by the Owner with any connections and coordination efforts to be made by the Contractor.
2. First aid facilities.
3. Sanitary facilities.
4. Potable water.

B. Comply with General Conditions/Supplemental Conditions.

C. First aid facilities and portable outside toilet facilities shall be in place on the Project site as soon as any activities are conducted on site. Field Office shall be installed by the time that pipe installation commences.

D. Maintain temporary facilities in a clean and safe condition throughout progress of the Work. In the event of loss or damage, immediately make all repairs and replacements necessary at no additional cost to the Owner. Remove all such temporary facilities and controls when the work is completed as appropriate relative to the progress of the Work, and as the requirements of the Contract provide.

1.2 TEMPORARY UTILITIES

A. Temporary Water: Contractor shall contract for delivery of potable drinking water to field office, and shall arrange for connection of water by connecting to the on-site plant water supply, as shown on the Drawings.

1.3 FIRST AID FACILITIES

The Contractor shall provide a suitable first aid station, equipped with all facilities and medical supplies to administer emergency first aid treatment. The Contractor shall have standing arrangements and a written protocol, a copy of which is to be posted at a central location for ease of observation, for the removal and hospital treatment of any injured person.

1.4 SANITARY FACILITIES

A. At least one portable outside toilet shall be provided for each pipe-laying crew, located in reasonable proximity to the work location. All facilities shall be kept in a clean and sanitary condition. Adequacy of these facilities will be subject to the Engineer's review, and the maintenance of same must be satisfactory to the Engineer at all time.

2 PRODUCTS

2.1 FIELD OFFICES AND STORAGE FACILITIES

A. A field office is not required to be provided for the work to be performed as part of this project.

3 EXECUTION

3.1 SITE SECURITY

A. The Contractor shall be responsible for security of temporary offices and facilities, equipment, tools, vehicles, materials, work-in-place, and any other property located on site for the duration of this Contract.

B. The Contractor shall remove all temporary facilities, equipment, tools, vehicles, materials, and any other property remaining upon completion of the Work, and no later than close-out of the Contract.

3.2 CLEANING DURING CONSTRUCTION

The job site shall be maintained in a neat, clean, and orderly manner at all times. Debris, waste materials, refuse, and rubbish shall be placed only in designated containers and locations. At least at bi-weekly intervals properly dispose of collected waste materials, debris, and rubbish.

END OF SECTION

SECTION 01610
TRANSPORTATION AND HANDLING

1 GENERAL

1.1 DESCRIPTION

A. The CONTRACTOR shall provide transportation of all materials and products furnished under these Contract Documents to the Work site. In addition, the CONTRACTOR shall provide preparation for shipment, loading, unloading, handling and preparation for installation and all other work and incidental items necessary or convenient to the CONTRACTOR for the satisfactory prosecution and completion of the Work.

B. Any and all materials and products, including spare parts, damaged during transportation or handling shall be repaired or replaced by the CONTRACTOR at no additional cost to the OWNER prior to being incorporated into the Work.

1.2 TRANSPORTATION

A. The scheduling of equipment deliveries to the job site is the responsibility of the CONTRACTOR. Mechanical equipment and related electrical components shall not be delivered before satisfactory storage is available.

B. Ship equipment, material and spare parts complete except where partial disassembly is required by transportation regulations or for protection of components.

C. All materials shall be suitably boxed, crated or otherwise protected during transportation.

D. Inspect and inventory items upon delivery to the site.

1.3 HANDLING

A. All materials and products, including spare parts, shall be carefully handled to prevent damage or excessive deflections during unloading or transportation.

B. Lifting and handling instructions furnished by the manufacturer or supplier shall be strictly followed. Eyebolts or lifting lugs furnished on materials shall be used in handling the equipment. Spreader bars or lifting beams shall be used when the distance between lifting points exceeds that permitted by standard industry practice.

C. Under no circumstances shall products such as pipe, structural steel, castings, reinforcement, lumber, piles, poles, be thrown or rolled off of trucks onto the ground.

D. Slings and chains shall be padded as required to prevent damage to protective coatings and finishes.

** END OF SECTION **

SECTION 01620
STORAGE AND PROTECTION

1 GENERAL

1.1 SCOPE

A. The work under this Section includes, but is not necessarily limited to, the furnishing of all labor, tools and materials to properly store and protect all materials, products, and the like, including spare parts, for the proper and complete performance of the Work.

1.2 STORAGE AND PROTECTION

A. Storage

1. Maintain ample way for all plant traffic at all times.
2. All property damaged as a result of storing of material shall be properly replaced at no additional cost to the OWNER.
3. Packaged materials shall be delivered in original unopened containers and so stored until ready for use.
4. All materials shall meet the requirements of these Specifications at the time that they are used in the Work.
5. Store products, including spare parts, in accordance with manufacturer's instructions. Products must be specifically prepared and certified for long-term outdoor storage by the manufacturer.

B. Protection: Use all means to protect the materials and products, including spare parts, of every section before, during and after installation and to protect the installed work and materials of all other trades.

C. Replacements: In the event of damage, immediately make all repairs and replacements at no additional cost to the OWNER.

D. Products stored outdoors shall be supported above the ground on suitable wooden blocks or braces arranged to prevent excessive deflection or bending between supports.

E. Building products and materials such as cement and grout shall be stored indoors in a dry location. Building products such as rough lumber and plywood may be stored outdoors under a properly secured waterproof covering. Reinforcing steel, anchor bolts, concrete inserts, wire ties, wall ties, sleeves, and the like, shall be stored off the ground (e.g., on pallets) in a prepared area.

** END OF SECTION **

SECTION 01625
GENERAL EQUIPMENT AND REQUIREMENTS

1 GENERAL

1.1 DESCRIPTION

A. These General Equipment Requirements apply, in general, to all equipment and piping. They supplement the detailed equipment Specifications, but in case of conflict, the detailed equipment Specifications shall govern.

1.2 UNIT RESPONSIBILITY

A. A single manufacturer shall assume unit responsibility for all items so specified in each technical section. Unit responsibility shall require that all items be products of, or guaranteed by, the manufacturer. The manufacturer shall be responsible for all coordination between components and provide all submittals, installation and start-up assistance and certifications on the equipment as a unit.

1.3 INSTALLATION

A. All equipment and materials shall be installed by skilled mechanics, in accordance with the approved shop drawings and the printed instructions of the manufacturer and as indicated and specified. Installation shall include furnishing any required lubricant and oil and grease in accordance with manufacturer's recommendations.

1.4 ADAPTATION AND LOCATION OF EQUIPMENT

A. When proposing equipment which requires an arrangement differing from that indicated on the drawings or specified, the CONTRACTOR must prepare and submit for review detailed structural, mechanical, and electrical drawings and equipment lists, utilities consumption schedule and operating instructions, showing necessary changes and embodying special features of the equipment he proposes to furnish. No responsibility for alteration of a planned structure to accommodate other types of equipment will be assumed by the OWNER. Equipment which requires alteration of a structure or structures will be considered only if the CONTRACTOR assumes all responsibility for making and coordinating all necessary alterations. Any and all such alterations shall be made at no additional cost to the OWNER.

1.5 PATENT ROYALTIES

A. All royalties and fees for patents covering materials, articles, apparatus, devices, or equipment shall be included in the Bid by the CONTRACTOR.

1.6 WORKMANSHIP AND MATERIALS

A. All equipment shall be designed, fabricated and assembled in accordance with the most modern engineering and shop practice. Individual parts shall be manufactured to standard sizes and gauges so that repair parts, furnished at any time, can be installed in the field. Like parts of duplicate units shall be interchangeable. Equipment shall be new and shall not have been in service at any time prior to delivery, except as required by tests.

B. Materials shall be suitable for service conditions. Iron castings shall be close grained, gray iron free from blowholes, flaws or excessive shrinkage and shall conform to ASTM A 48, Class 30 minimum. Plugging of defective castings shall not be permitted. Castings shall be annealed to remove internal stresses prior to machining and shall have the mark number and heat number cast on them.

C. Except where otherwise specified, structural and miscellaneous fabricated steel used in items of equipment shall conform to the Standards of the American Institute of Steel Construction. All structural members shall be considered as subject to shock or vibratory loads.

D. All replaceable or expendable elements such as filters, screens, drive belts, fuses, lamps, etc., shall be easily accessible and replaceable without need of dismantling equipment or

piping. All such items shall be of a standard type that is readily available from multiple suppliers.

E. Threaded openings for drains or vents in pump volutes, compressor or fan scrolls, air receivers, and heat exchangers which are plugged during normal operation shall be provided with stainless steel plugs.

1.7 LUBRICATION AND LUBRICATION FITTINGS

A. Equipment shall be adequately lubricated by systems which require attention no more frequently than weekly during continuous operation. Lubrication systems shall not require attention during start-up or shutdown and shall not waste lubricants.

B. Lubricants of the type recommended by the equipment manufacturer shall be provided in sufficient quantity by the CONTRACTOR to fill all lubricant reservoirs and to replace all lubricants consumed during testing, start-up and initial operation, plus sufficient quantities of lubricants to lubricate all equipment for one year of normal service.

C. Where special run-in oil or storage lubricants are used, they shall be flushed out and replaced with the required service lubricant by the Manufacturer's Technical Representative.

D. Tag each piece of equipment with a cloth tag showing proper type lubricant, period between lubrications, date of lubrication and worker's initials. Have space for 10 lubrication notations.

E. Fittings shall be of the bull-neck, check type for use with a portable high-pressure grease gun.

F. Except for rotating shaft couplings, all lubrication fittings shall be brought to the outside of all equipment so that they are readily accessible from the outside without the necessity of removing covers, plates, housings or guards. Fittings shall be accessible from safe, permanent platforms or walk areas. Extension fittings and tubing shall be provided on all grease fittings that are installed in an inaccessible location. The extension is to be located so that equipment can be lubricated from the operating level without the use of ladders, staging or shutting down the equipment. Connection from a remote fitting to the point of use shall be with minimum 3/16-inch Type 316 stainless steel tubing, securely mounted parallel to equipment lines and protected where exposed to damage.

1.8 SAFETY GUARDS

A. All belt or chain drives, fan blades, couplings and other moving or rotating parts shall be covered on all sides by an OSHA-approved all-metal safety guard. Safety guards shall be fabricated from 16 USS gauge or heavier galvanized or aluminum-clad sheet steel or 1/2-inch mesh galvanized expanded metal. Each guard shall be designed for easy installation and removal. All supports and accessories shall be provided for each guard. Supports and accessories, including bolts, shall be galvanized. All safety guards in outdoor locations shall be designed to prevent the entrance of rain and dripping water. All safety guards shall comply with OSHA general industry standards, Part 1910, Subpart O, Machinery and Machine Guarding. Provide tachometer access on shaft ends.

1.9 EQUIPMENT FOUNDATIONS AND GROUTING

A. The CONTRACTOR shall furnish all materials and construct suitable raised, reinforced concrete foundations for all equipment in accordance with approved shop drawings and manufacturer installation instructions, even though such foundations may not be indicated on the Drawings.

1.10 ALIGNMENT OF MOTORS AND EQUIPMENT

A. In every case where a drive motor is connected to a driven piece of equipment by a flexible coupling, the coupling halves shall be disconnected and the alignment between the motor and the equipment checked and corrected. Machinery shall first be properly aligned and leveled by means of steel wedges and shims or jacking screws near anchor bolts. Anchor bolts shall be tightened against the shims on wedges or jacking screws and the equipment

shall again be checked for level and alignment before placing grout. Wedges shall not be placed between machined surfaces.

B. In general, checking and correcting the alignment shall follow the procedures set up in the Standards of the Hydraulic Institute, Instructions for Installation, Operation, and Maintenance of Centrifugal Pumps. Equipment shall be properly leveled and brought into angular and parallel alignment.

C. Equipment shall be installed in such a way that no strain is transmitted to the equipment by piping systems or adjacent equipment.

** END OF SECTION **

SECTION 01700
CONTRACT CLOSEOUT

1 GENERAL

1.1 DESCRIPTION

A. Contract closeout is the process that recognizes Substantial Completion, the transition of operations to the OWNER, and Final Completion. As the Work nears Substantial Completion, sequences of activities and their responsibilities need to be identified, planned, scheduled, and effectively implemented to facilitate a smooth completion of the overall project.

B. This section defines the process by which the transition from construction to plant operations will be affected. Terms, roles, responsibilities, and actions will be identified herein.

1.2 RELEASES FROM AGREEMENTS

A. Furnish OWNER written releases from any and all subcontractors or suppliers, or the like, who performed Work or supplied labor, materials, and/or services pursuant.

B. In the event CONTRACTOR is unable to secure written releases, inform the OWNER of the reasons.

1.3 FINAL INSPECTION

A. OWNER or its representatives will examine the site and/or Work, and OWNER will direct CONTRACTOR to complete Work that may be necessary to satisfy terms of the agreement.

2 PRODUCTS (NOT USED)

3 EXECUTION

3.1 SUBSTANTIAL COMPLETION

A. Substantial Completion is defined in the General Conditions.

B. The intended use for the project is to have the pump station complete and in service pumping wastewater in accordance with contract requirements. The pump station is to be fully functional in the designed control mode and properly operating for a period of not less than twenty-four hours before the Work will be eligible for declaration as substantially complete. Additionally, any and all site grading, site lighting, and all roads and pavements are to be complete.

C. All required certificates of proper installation shall be properly completed and submitted to the ENGINEER prior to the Work being eligible for declaration as substantially complete.

D. The balance of Work remaining and all unsatisfactory work items shall be identified, compiled, and submitted to the ENGINEER, along with a schedule of completion for all listed activities prior to the Work being eligible for declaration as substantially complete. The ENGINEER shall be afforded 5 working days to review the index and schedule and preparation of the punch list. Upon development of the punch list, the Work may be declared substantially complete.

E. The CONTRACTOR shall perform all punch list tasks in a manner which will not disrupt operations of the pump station.

3.2 PUNCHLIST

A. Development of the punch list is the result of a survey of the CONTRACTOR's work by the ENGINEER and the OWNER performed prior to Substantial Completion. The objective of the survey is to identify the activities which are incomplete or work products that are

unacceptable/unsatisfactory. The survey itself will corroborate the index of activities submitted by the CONTRACTOR.

3.3 FINAL ACCEPTANCE

A. Final Acceptance is as addressed in the General Conditions.

B. Completion of all punch list tasks/requirements is required prior to the Work being eligible for declaration as finally accepted.

C. All record documents must be submitted to and accepted by the ENGINEER prior to the Work being eligible for declaration as finally accepted.

D. All releases must be submitted to and accepted by the ENGINEER prior to the Work being eligible for declaration as finally accepted.

** END OF SECTION **

SECTION 01710
CLEANING

1 GENERAL

1.1 SCOPE

A. This Section covers the general cleaning which the CONTRACTOR shall be required to perform both during construction and before final acceptance of the Project unless otherwise shown on the Drawings or specified elsewhere in these Specifications.

1.2 QUALITY ASSURANCE

A. Daily, and more often if necessary, conduct inspections verifying that requirements of cleanliness are being met.

B. In addition to the standards described in this Section, comply with all pertinent requirements of governmental agencies having jurisdiction.

1.3 HAZARDOUS MATERIAL AND WASTE

A. The CONTRACTOR shall handle hazardous waste and materials in accordance with applicable local, state, and federal regulations. Waste shall be disposed of in approved landfills as applicable.

B. The CONTRACTOR shall prevent accumulation of wastes which create hazardous conditions.

C. Burning or burying rubbish and waste materials on the site shall not be allowed.

D. Disposal of hazardous wastes or materials into sanitary or storm sewers shall not be allowed.

1.4 DISPOSAL OF SURPLUS MATERIALS

A. Unless otherwise shown on the Drawings, specified or directed, the CONTRACTOR shall legally dispose off the site all surplus materials and equipment from demolition and shall provide suitable off-site disposal site, or utilize a site designated by the OWNER.

2 PRODUCTS

2.1 CLEANING MATERIALS AND EQUIPMENT

A. Use only cleaning materials, methods and equipment which are compatible with the surface being cleaned, as recommended by the manufacturer of the material or as approved by the ENGINEER.

3 EXECUTION

3.1 PROGRESS CLEANING

A. General

1. Do not allow the accumulation of scrap, debris, waste material and other items not required for construction of this Work.
2. At least each week, and more often if necessary, completely remove all scrap, debris and waste material from the job site.
3. Provide adequate storage for all items awaiting removal from the job site, observing all requirements for fire protection and protection of the environment.
4. At all times maintain the site in a neat and orderly condition which meets the approval of the ENGINEER.

3.2 FINAL CLEANING

A. Definitions: Unless otherwise specifically specified, "clean" for the purpose of this Article shall be interpreted as the level of cleanliness generally provided by commercial building maintenance subcontractors using commercial quality building maintenance equipment and materials.

B. Prior to completion of the Work, remove from the job site all tools, surplus materials, equipment, scrap, debris and waste. Conduct final progress cleaning as described in 3.01 above.

C. Unless otherwise specifically directed by the ENGINEER, hose down all paved areas on the site and all public sidewalks directly adjacent to the site; rake clean other surfaces of the grounds. Completely remove all resultant debris.

D. Restoration of Landscape Damage: Any landscape feature damaged by the CONTRACTOR shall be restored as nearly as possible to its original condition at the CONTRACTOR's expense.

E. Timing: Schedule final cleaning as approved by the ENGINEER to enable the OWNER to accept the Project.

** END OF SECTION **

SECTION 01720
RECORD DOCUMENTS

1 GENERAL

1.1 SCOPE

A. The work under this Section includes, but is not necessarily limited to, the compiling, maintaining, recording and submitting of project record documents as herein specified.

B. Record documents to be prepared and submitted by the CONTRACTOR include, but are not limited to:

1. As-built drawings
2. Change orders and other modifications to the Contract
3. ENGINEER field orders or written instructions, including Requests for Information (RFI) and Clarification Memorandums
4. Reviewed shop drawings, product data and samples
5. Test records

C. The CONTRACTOR shall maintain on the Project site throughout the Contract Time an up-to-date set of Record Drawings.

1.2 MAINTENANCE OF DOCUMENTS AND SAMPLES

A. Storage

1. Store documents and samples in the CONTRACTOR's field office, apart from documents used for construction.
2. Provide files and racks for storage of documents.
3. Provide locked cabinet or secure storage space for storage of samples.

B. File documents and samples in accordance with format of these Specifications.

C. Maintenance

1. Maintain documents in a clean, dry, legible condition and in good order.
2. Do not use record documents for construction purposes.
3. Maintain at the site for the Local Governing Authority one copy of all record documents.

D. Make documents and samples available at all times for inspection by ENGINEER.

E. Failure to maintain the Record Documents in a satisfactory manner may be cause for withholding of a certificate for payment.

1.3 QUALITY ASSURANCE

A. Unless noted otherwise, Record Drawings shall provide dimensions, distances and coordinates to the nearest 0.1 foot.

B. Unless noted otherwise, Record Drawings shall provide elevations to the nearest 0.01 foot for all pertinent items constructed by the CONTRACTOR.

1.4 SPECIFICATIONS

A. Legibly mark each section to record changes made by Requests for information (RFI), field order, clarification memoranda, or by change order.

1.5 SUBMITTAL

A. At contract closeout, deliver Record Documents to the ENGINEER.

B. Accompany submittal with transmittal letter, in duplicate, containing:

1. Date

2. Project title and number
3. CONTRACTOR's name and address
4. Title and number of each record document
5. Signature of CONTRACTOR or CONTRACTOR's authorized representative

2 PRODUCTS (NOT USED)

3 EXECUTION

3.1 AS-BUILT DRAWINGS

A. The CONTRACTOR must maintain an up-to-date field record set of drawings by marking changes and other information directly on a set of contract drawings. The ENGINEER will periodically review the as-built drawings to confirm that the recorded information is current.

B. Making Entries on As-Built Drawings (including Technical Specifications):

1. Using an erasable colored pencil (not ink or indelible pencil), clearly describe change by graphic line and note as required.
   a. Color Coding:
      1) Green when showing information deleted from Documents.
      2) Red when showing information added to Documents.
      3) Blue and circled in blue to show notes.
2. Date all entries.
3. Clearly annotate who is making the entry.
4. Call attention to entry by "cloud" drawn around area or areas affected.
5. Legibly mark to record actual changes made during construction, including, but not limited to:
   a. Depths of various elements of foundation in relation to finished first floor data if not shown or where depth differs from that shown.
   b. Horizontal and vertical locations of existing and new underground facilities and appurtenances, and other underground structures, equipment, or Work. Reference to at least two measurements to permanent surface improvements.
   c. Location of internal utilities and appurtenances concealed in the construction referenced to visible and accessible features of the structure.
   d. Locate existing facilities, piping, equipment, and items critical td the interface between existing physical conditions or construction and new construction.
   e. Changes made by Addenda and Field Orders, Work Change Directive, Change Order, Written Amendment, and ENGINEER's written interpretation and clarification using consistent symbols for each and showing appropriate document tracking number.
6. Dimensions on Schematic Layouts: Show on as-built drawings, by dimension, the centerline of each run of items such as are described in previous subparagraph above.
   a. Clearly identify the item by accurate note such as "cast iron drain, "galv. water," and the like.
   b. Show, by symbol or note, vertical location of item ("under slab," "in ceiling plenum," "exposed," and the like).
   c. Make identification so descriptive that it may be related reliably to the Technical Specifications.

7. Technical Specifications: Legibly mark to record and reference actual changes made during construction, including, but not limited to:
    a. Approved changes to material, equipment or construction procedures referencing the document (RFI, CO, Addendum, Shop Drawing Submittal, etc.) that authorized the change.
    b. Note all changes to material and equipment design, performance and maintenance criteria.

** END OF SECTION **

SECTION 01740
WARRANTIES AND BONDS

1 GENERAL

1.1 PROJECT MAINTENANCE AND WARRANTY

A. Maintain and keep in good repair the Work covered by these Drawings and Specifications until acceptance by the OWNER.

B. The CONTRACTOR shall warrant for a period of one year, or for the period as specified in the technical specifications of these Contract Documents, from the date of OWNER's written acceptance of the Work, or portions of the Work, as defined in the Contract Documents, that the completed Work is free from all defects due to faulty products or workmanship and the CONTRACTOR shall promptly make such corrections as may be necessary by reason of such defects. The OWNER will give notice of observed defects with reasonable promptness. In the event that the CONTRACTOR should fail to make such repairs, adjustments or other work that may be made necessary by such defects, the OWNER may do so and charge the CONTRACTOR the cost thereby incurred. The Performance Bond shall remain in full force and effect throughout the warranty period.

C. The CONTRACTOR shall not be obligated to make replacements which become necessary because of ordinary wear and tear, or as a result of improper operation or maintenance, or as a result of improper work or damage by another CONTRACTOR or the OWNER, or to perform any work which is normally performed by a maintenance crew during operation.

D. The CONTRACTOR shall, at CONTRACTOR's own expense, furnish all labor, materials, tools and equipment required and shall make such repairs and removals and shall perform such work or reconstruction as may be made necessary by any structural or functional defect or failure resulting from neglect, faulty workmanship or faulty materials, in any part of the Work performed by the CONTRACTOR. Such repair shall also include refilling of trenches, excavations or embankments which show settlement or erosion after backfilling or placement.

** END OF SECTION **

SECTION 02000
GENERAL CONSTRUCTION REQUIREMENTS

1 GENERAL

1.1 WORK INCLUDED

A. The work described in this section applies to the Project in general. The Contractor shall comply with these requirements in performing all construction activities under the Contract. Provide labor, material, tools and equipment to perform site preparation work as indicated and specified.

1.2 CLEARING AND GRUBBING

A. Where necessary, the Contractor shall clear and grub a sufficient width along the pipeline to permit installation of the work. The minimum width of the cleared and grubbed area shall be the width of the permanent easement and the maximum shall be the width of the construction easement. Disposal of all trees, shrubs and debris shall be the responsibility of the Contractor who shall comply with all state and local laws and regulations including any burning bans in effect at the time of construction. The Contractor shall clear only that area of the construction site that has adequate erosion and sedimentation control in place.

B. The debris resulting from the clearing and grubbing operation shall be hauled to a disposal site secured by the Contractor and shall be disposed of in accordance with all requirements of federal, state, county and municipal regulations. No debris of any kind shall be deposited in any stream or body of water, or in any street or alley. No debris shall be deposited upon any private property except with written consent of the property owner. In no case shall any material or debris be left on the project, shoved onto abutting private properties or buried on the project. Trees, stumps, brush or other clearing debris may be used within the construction easement only if ground into wood chips and used as mulch for erosion and sedimentation control.

1.3 BARRICADES AND WARNING SIGNS

A. The Contractor shall provide, erect and maintain all necessary barricades, suitable and sufficient lighting, danger signals and signs, provide sufficient number of watchmen and take all necessary precautions for the protection of the work and the safety of the public. Streets closed to traffic shall be protected by effective barricades on which shall be placed acceptable warning signs. All barricades and obstructions shall be illuminated at night, and all lights for this purpose shall be kept burning from sunset to sunrise.

1.4 VEHICULAR TRAFFIC CONTROL

A. All work shall be planned and prosecuted by the Contractor to minimize interference with vehicular and pedestrian traffic. Whenever the work under this contract causes disruption to the normal flow of traffic or poses a potential hazard, the Contractor shall be responsible for implementing safety measures and traffic control procedures as outlined in the "Manual on Uniform Traffic Control Devices", latest edition, published by the U.S. Department of Transportation, Federal Highway Administration.

B. At the beginning of the Project, Contractor shall contact the Owner and local authorities having jurisdiction over public roads to confirm procedures for road closures and shall comply with State and Local Laws and Regulations regarding closing or restricting the use of public streets or highways. No public or private road shall be closed or restricted except with permission of the proper authority. No resident or business shall be denied vehicular access to his property for any length of time except as necessary as determined by the Engineer.

C. Whenever it is necessary to cross, close, or obstruct roads, driveways, and/or walks, whether public or private, Contractor shall provide suitable and safe bridges, detours, or other temporary expedients for accommodation of public and private travel.

D. No loading or unloading of equipment or materials shall be allowed on the pavement of local public streets unless authorized by the Owner. During loading or unloading operations, flagmen and temporary signs shall be provided to regulate traffic. Mats shall be utilized beneath tracked equipment to prevent pavement damage. Pavement, curbing, sidewalks, or any other street component damaged by the Contractor shall be replaced by the Contractor at the Contractor's expense.

E. On any utility crew working in the vicinity of public roads, Contractor shall employ workers that are trained and competent in traffic control and safety procedures.

1.5 PROTECTION OF PROPERTY

A. Unless otherwise noted, the Contractor is responsible for removal of trees within the construction easement as necessary for safe performance of the work, but only such trees as necessary shall be removed. Trees which are damaged or later die as a result of the work shall be removed. Protect from damage and preserve trees, shrubs, and other plants outside the limits of the Work.

1. Do not stockpile materials or permit traffic within drip lines of trees.
2. Maintain temporary barricades around trees.
3. No trees outside the construction easement shall be removed without written approval of the property owner and the Engineer.
4. In the event of damage to bark, trunks, limbs, or roots of plants that are not designated for removal, treat damage by corrective pruning, bark tracing, application of a heavy coating of tree paint, and other accepted horticultural and tree surgery practices.

B. In the case of shrubs and ornamental trees smaller than 3 inches diameter, the Contractor is responsible for either: (a) protecting these from damage, or (b) temporarily removing and then re-setting them without damage, or (c) replacing them with new stock of equal quality.

C. In general, grass will be seeded over all areas as specified elsewhere herein and all areas will be left in a neat condition, free of debris.

D. All property such as mailboxes, fences, signs, curb, paving, drain pipes, etc. shall be restored to original condition. Payment will be made only for those items that are listed in the bid proposal.

E. No property beyond the construction easement is to be altered, but if this does occur the Contractor will promptly remedy same at no cost to the Owner.

F. Contractor is responsible for maintaining all existing property corner markers. Markers in the way of construction shall be referenced prior to construction to facilitate replacement. Any lost or damaged property markers and pins shall be replaced and the contractors expense.

1.6 PROTECTION OF PAVEMENT

A. When working along paved streets or roads, the Contractor shall use rubber-tired or other equipment which will not damage the paving and when pavement is damaged through negligence or carelessness on the part of the Contractor during construction, it shall be replaced at no expense to the City, County, or State, as the case may be. Mats shall be used to support tracked equipment while in use or while sitting on pavement. In no case shall a tracked vehicle be "walked" along a paved road or street from one section of work to another.

1.7 EXISTING UTILITIES AND STRUCTURES

A. Information regarding underground utilities on the drawings is not guaranteed as to accuracy or completeness. Prior to beginning work the Contractor shall request a field location through the Utilities Protection Center (811 or 1-800-282-7411) and any utility owners thought to have facilities in the area. The Contractor shall promptly compare these field-marked locations with the project plans and then notify the engineer of any anticipated problems or need for contract changes. It is the Contractor’s responsibility to excavate for

the purpose of determining exact elevations or locations at utility crossings and other critical locations well in advance of the work under this contract.

B. All existing pipes, drains, or other structures on, above, or below ground shall be carefully supported and protected from injury and if injured, they shall be restored in a satisfactory manner by and at the expense of the Contractor.

1.8 HIGHWAY AND RAILROAD CROSSINGS

A. Where lines cross railroads and/or highways under the jurisdiction of the State highway department, the Owner will secure written permission from the controlling authority before any work can be done within the right-of-way. After the Owner notifies the Contractor that the permit or permits have been obtained, the Contractor shall coordinate his activities and construction procedure with the proper authority of the Railroad or Highway Department and shall conform with the requirements thereof. The Contractor will be required to furnish a release from the said controlling authority before final acceptance of the work. The Contractor will be responsible for all damage and injuries to persons and property inflicted or caused by said work.

1.9 FENCE REMOVED AND REPLACED (ALL TYPES AND SIZES)

A. The Contractor shall take down fences on or crossing right-of-way for such periods of time only as are necessary to prosecute the work of clearing, grubbing, trenching, pipe laying and backfilling. Gaps made in fences shall be closed in a substantial manner at night and during any suspension of work, and upon completion of the project, fences shall be restored to as good condition as before disturbed. No charges shall be made by the Contractor for any expense incurred in taking down or restoring fences, except where listed in the bid proposal.

1.10 REMOVING AND REPLACING PAVEMENT

A. All pavement cuts on City or County roads shall be made by sawing prior to excavation to eliminate uneven and ragged edges. Removing and replacing pavement shall consist of removing the type of pavement and base encountered and replacing same to its original shape, appearance and riding quality, in accordance with the drawings.

B. The trench shall be backfilled in layers not more than 6" thick and shall be thoroughly compacted with mechanical tamps. No base course shall be placed on loose earth or dusty material.

C. Paving material and thickness shall be as shown on the drawings.

1.11 BACKFILL MATERIAL - GENERAL

A. Backfill material shall consist of soil or soil-rock mixture, which is free from topsoil, organic matter, and other deleterious substances. Large boulders, thick rock or quartz layers, which are not broken down by compaction equipment, will not be suitable for use in the fill.

B. Backfill material shall be subject to the approval of the Engineer.

1.12 SIDEWALK REPLACEMENT

A. Sidewalk removed shall be replaced with sidewalks of the same width, similar finish and a minimum of 4" thickness. The Contractor shall remove only those sections of sidewalk that need to be removed to carry out the work. Adjoining sections of sidewalk shall be protected from damage during construction. Sidewalks to be removed shall be removed to the nearest expansion joint or sawed at the nearest control joint.

1.13 CURB AND GUTTER REMOVAL AND REPLACEMENT

A. Curb and Gutter shall be removed only to the extent necessary to complete the work under this Project. Any curb and gutter that is removed shall be replaced. The replaced section shall match adjacent curb and gutter with respect to materials, finish, shape, slope and alignment.

B. Before removal of any section, it shall first be cut to avoid damage to adjacent, remaining curb and gutter.

C. After the concrete has set sufficiently, the space behind the curb shall be refilled to the required elevation with material which shall be compacted by tamping until firm and solid.

1.14 REPLACING GRAVEL DRIVEWAYS

A. Gravel driveway stone shall be removed and replaced where required. Replacement materials shall resemble the original stone as close as practical. Gravel shall be placed 4" deep.

1.15 DUST CONTROL

A. Contractor shall use all means necessary to control dust on and near the work and all off-site areas. As a minimum, Contractor shall moisten all surfaces as required to prevent excessive dust from escaping the work site and all off-site areas.

1.16 CLEAN-UP AND MAINTENANCE

A. All surplus materials, tools, temporary structures, excess dirt, rubbish and debris shall be removed by the Contractor and the site of construction shall be left in a clean and neat condition, satisfactory to the Engineer.

B. After the work is accepted as a whole, the Contractor shall maintain the surface of the unpaved streets, adjacent curbs, sidewalks, gutters, street paving, shrubbery, fences, sod, grass and other disturbed surfaces for a period of one hundred twenty days thereafter.

C. All labor and material required for such maintenance and/or repairs shall be furnished at no cost to the Owner, and the work shall be done in a manner satisfactory to the Engineer.

** END OF SECTION **

SECTION 02100
SITE PREPARATION

1 GENERAL

1.1 DESCRIPTION

A. Provide labor, material, tools and equipment to perform site preparation work as indicated and specified.

2 PRODUCTS (NOT USED)

3 EXECUTION

3.1 EXISTING TREES AND VEGETATION

A. Avoid cutting or injuring trees and vegetation outside property or easement lines and outside areas to be cleared as indicated.

B. Remove trees within only the portion of the construction easement that is necessary to construct the project, unless otherwise shown on the Drawings.

3.2 CLEARING

A. Preparatory to beginning of construction operations, the CONTRACTOR shall remove from the project area all vegetable growth, trees, brush, stumps, roots, debris, and any other objectionable matter, including fences, buildings, and other structures shown on the drawing in the construction areas which are designed for removal or which, if left in place, would interfere with the proper performance or completion of the contemplated work, would impair its subsequent use, or would form obstructions therein.

3.3 GRUBBING, STRIPPING, DISPOSAL

A. Remove stumps and roots larger than 1-inch in diameter to a depth of 6-inches. All holes or cavities which extend below the subgrade elevation of the proposed work shall be filled with suitable material.

B. Strip stumps, roots, foreign matter, topsoil, loam and unsuitable earth from ground surface. Utilize topsoil and loam in so far as possible for finished surfacing.

C. Promptly dispose off site material from clearing and grubbing not reused or stockpiled. In doing so, observe all applicable laws, ordinances, rules and regulations. Do not consider work completed until final cleaning, unless otherwise directed.

D. Burning or burying of removed trees and debris is not allowed. Trees and other plant material removed shall be ground or chipped and used as mulch where possible. Excess material shall be removed from the site. No tree stumps shall be left visible. On any trees not removed whole, stumps shall be ground to at least 12” below surface.

** END OF SECTION **

SECTION 02125

EROSION AND SEDIMENTATION CONTROL FOR INFRASTRUCTURE PROJECTS

PART 1 – GENERAL

1.01 SCOPE

A. The work specified in this Section consists of providing and maintaining temporary and permanent erosion and sedimentation controls as shown on the Drawings and as needed to comply with the Georgia Erosion and Sedimentation Control Act of 1975. It also includes performing all work required for compliance with the National Pollutant Discharge Elimination System (NPDES) General Permit (No. GAR100002, Storm Water Discharges Associated With Construction Activity For Infrastructure Construction Projects), and with all other applicable regulations. Contractor's obligations under NPDES permitting shall include:

   1. Contractor shall prepare a Notice of Intent (NOI), showing the Contractor as "Operator" and Primary Permittee. Contractor shall sign certifications required in section V of the NOI.

   2. Contractor shall install and maintain Best Management Practices (BMPs) necessary for compliance with regulations.

   3. Contractor shall conduct, utilizing qualified personnel as defined by the Permit, all inspections, monitoring, recording and reporting required by the Permit.

   4. Contractor shall prepare a Notice of Termination (NOT) to EPD as required by the Permit.

   5. Contractor shall be liable for any violations or enforcement actions by regulatory authorities in connection with the NPDES Permit for Stormwater Discharge.

B. The erosion control measures shown on the contract drawings constitute only a conceptual plan with minimum requirements. Additional Best Management Practices (BMPs), coordinated with the Contractor's specific construction operations and scheduling for this project, may be needed to meet the requirements of the NPDES Permit. Temporary and permanent erosion and sedimentation controls include grassing and mulching of disturbed areas and structural barriers for control of erosion and sedimentation within acceptable limits as established by the Georgia Erosion and Sedimentation Control Act of 1975, as amended, the Federal Clean Water Act, as amended, the Georgia Water Quality Control Act, as amended, and applicable codes, ordinances, rules, regulations and laws of local and municipal authorities having jurisdiction.

   1. "Minimum BMP Requirements" for this project include:

      a. Installation of Type B silt fence at those locations where runoff leaves the construction zone; that is, the downhill edge of construction limits. Note that in general the construction drawings do not show the specific locations for Type B fence since this a universal requirement for the project.

      b. Installation of Type C silt fence at those locations such as ditch crossings, around drainage inlets and other areas where runoff flow and sediment storage requirements are expected to exceed the capacity of Type B silt fence. Note that in general these minimum locations for Type C silt fence are shown on the contract.

c. Installation of Construction Exits at locations where construction equipment is expected to exit from the construction zone. Note that in general these minimum locations are shown on the contract.

d. Installation of other BMPs that are shown on the contract drawings or listed herein under “Minimum BMP Requirements” for this project.

2. “Additional BMP Requirements” for this project include all other work, beyond the “Minimum BMP Requirements” listed above, that is required to comply with this section of the contract documents.

C. Land disturbance permit shall be obtained by the Owner. Land disturbance activity shall not commence until the Land Disturbance Activity Permit has been issued.

D. This work also includes the subsequent removal of temporary erosion and sedimentation controls.

1.02 SUBMITTALS

A. Submit product data in accordance with the requirements of Section 01340 of these Specifications.

B. Submit three copies of the Erosion, Sedimentation and Pollution Control Plan (ESPCP) and Notice of Intent (NOI) to the Engineer for the project records.

C. Submit the Erosion, Sedimentation and Pollution Control Plan (ESPCP) and fully executed Notice of Intent (NOI) to the Georgia Environmental Protection Division (EPD) at least fourteen (14) prior to starting work at the project site.

1.03 QUALITY ASSURANCE

A. Perform all work under this Section in accordance with all pertinent rules and regulations including, but not necessarily limited to, those stated in these Specifications. Where provisions of pertinent rules and regulations conflict with these Specifications, the more stringent provisions shall govern.

B. Provide all materials and promptly take all actions necessary to achieve effective erosion and sedimentation control in accordance with the Georgia Erosion and Sedimentation Control Act of 1975, as amended (OCGA §12-7-1, et. seq.), the NPDES General Permit, local ordinances, other permits, local enforcing agency guidelines and these Specifications.

C. Basic Principles

1. Coordinate the land disturbance activities to fit the topography, soil types and construction operations.

2. Minimize the disturbed area and the duration of exposure to erosive elements.

3. Provide temporary or permanent stabilization to disturbed areas immediately after rough grading is complete.

4. Safely convey run-off from the site to a stable outlet to prevent flooding and damage to downstream facilities resulting from increased runoff from the site.

5. Retain sediment on-site that was generated on-site.

6. Minimize encroachment upon watercourses.

D. Implementation

1. The Contractor is solely responsible for the control of erosion within the Project site and the prevention of sedimentation from leaving the Project site or entering waterways.

2. The Contractor shall install temporary and permanent erosion and sedimentation controls which will ensure that runoff from the disturbed area of the Project site shall pass through a filter system before exiting the Project site.

3. The Contractor shall provide temporary and permanent erosion and sedimentation control measures to prevent silt and sediment from entering the waterways.

4. The Contractor shall limit land disturbance activity to the minimum required to perform the work required by the project.

5. The Contractor shall maintain erosion and sedimentation control measures within disturbed areas on the entire site until final stabilization has been achieved on areas disturbed by construction. Maintenance shall include mulching, re-seeding, clean-out of sediment barriers and sediment ponds, replacement of washed-out or undermined rip rap and adding of erosion control material as necessary.

6. All erosion and sediment control measures shall be installed prior to initiation of construction activities or immediately after if location of control measures interferes with construction.

7. The Contractor shall designate one individual to be responsible for implementation and maintenance of erosion and sediment controls on a 24-hour, everyday basis and shall furnish the individual's name, address, and 24-hour telephone number to the Owner. This information shall be updated as necessary.

PART 2 – PRODUCTS

2.01 GENERAL

Standard vegetative and structural BMP measures shall comply with the Manual for Erosion and Sediment Control in Georgia. Products not listed that manual may be utilized on the project upon approval by the person who prepared the Erosion, Sedimentation and Pollution Control Plan (ESPCP) for the project.

2.02 SEDIMENT BARRIERS

A. STAKED HAYBALES - Sd1

1. Hay bale barriers are placed in a single row on natural ground where the most likely erodible areas are located to restrain sediment particles carried by sheet flow.

B. SILT FENCE - Sd1

1. Silt fences are temporary measures to retain suspended silt particles carried by sheet flow.

2. Silt fence consists of silt fabric, as specified in the Georgia Department of Transportation list #36, wood or steel posts, and wire or nail fasteners.

3. Type Sd-S silt fence is a woven 36-inch wide filter fabric with wire reinforcement. Sediment barriers being used as Type S for sensitive areas shall have a support spacing of no greater than 4 feet on center, with each driven into the ground 18 inches.

C. Stone Check Dams: Stone shall conform to the requirements of Section 805.01 of the Georgia Department of Transportation Standard Specification, latest edition, for Stone Dumped Rip Rap except the stone shall be graded stone ranging from 2 to 10-inches in size.

2.03 CONSTRUCTION EXIT STONE

Aggregate size shall be in accordance with the National Stone Association Size R-2 (1.5 to 3.5-inch stone).

2.04 CONCRETE

Concrete shall have a compressive strength of not less than 3,000 psi and shall conform to the requirements for Class "B" concrete.

2.05 RIPRAP

Stone Rip Rap: Unless shown or specified otherwise, stone rip rap shall be Georgia DOT, Type 3.

2.06 FILTER FABRIC

A. Filter fabric used for sediment control purposes shall be the non-woven type and shall conform to the Georgia Department of Transportation Standard Specifications, Section 881.06 for non-woven fabrics.

B. Filter fabric shall be an approved product on the Georgia Department of Transportation Qualified Product List No. 28, latest edition.

2.07 VEGETATIVE PRACTICES

A. GENERAL

1. Disturbed areas shall be stabilized as construction progresses. For water mains installed within easements, the construction corridor shall not exceed 1,000 linear feet without stabilization. All other projects shall not exceed 300 linear feet without stabilization

B. DISTURBED AREA STABILIZATION (WITH MULCHING ONLY) - Ds1

1. This practice is applicable where disturbed areas, temporarily idle, have not been established to final grade and/or where permanent vegetative cover is delayed for a period not to exceed 6 months.

2. Mulch materials shall consist of dry straw or hay, wood chips, erosion control matting or netting, or polyethylene film. The mulch should be uniform, spread over the designated area from 2 to 4 inches thick.

3. Any and all disturbed areas that have not yet reached final grade shall be stabilized with mulch or temporary grassing within fourteen (14) calendar days of disturbance.

C. DISTURBED AREA STABILIZATION (WITH TEMPORARY SEEDING) - Ds2

1. Temporary seeding is a measure consisting of seeding and mulching to reduce erosion. All disturbed areas shall be seeded when and where necessary to reduce erosion.

2. This practice is applicable where disturbed areas, temporarily idle, have not been established to final grade and/or where permanent vegetative cover is delayed for up to 6 months.

3. Temporary seeding consists of a grass or grass-legume mixture suitable to the area and season of the year.

D. DISTURBED AREA STABILIZATION (WITH PERMANENT VEGETATION) - Ds3

1. See Section 02936 – Grassing

E. DISTURBED AREA STABILIZATION (WITH SODDING) - Ds4

1. See Section 02936 – Grassing

F. EROSION CONTROL SLOPE STABILIZATION- Ss

1. This practice is a protective covering (blanket) or soil stabilization mat used to stabilize disturbed areas until permanent vegetation on steep slopes, channels, or shorelines can be established.

2. Concentrated flow areas, all slopes steeper than 2.5:1 and with a height of ten feet or greater, and cuts and fills within stream buffers, shall be stabilized with the appropriate erosion control matting or blankets.

3. All blanket and matting materials shall be on the Georgia Department of Transportation Qualified Products List (QPL #62 for Blankets, QPL #49 for Matting).

PART 3 – EXECUTION

3.01 GENERAL

A. All erosion and sediment control devices and structures shall be inspected by the Contractor after each rainfall event and maintained, repaired or supplemented as necessary to satisfy the contract requirements. Sediment ponds and barriers shall be cleaned out after buildup of sediment on a schedule that will prevent overflow of silt over the top of the barrier.

B. After adequate permanent stabilization has been provided and accepted by the Engineer, all temporary erosion and sediment control structures and devices shall be removed.

C. Basic Guidelines for Best Management Practices:

1. Coordinate the land disturbance activities to fit the topography, soil types and site conditions.

2. Minimize the size of disturbed areas and the duration of exposure of non-vegetated areas. Refer to Section 02612, 3.02, for trench excavation.

3. Provide temporary or permanent stabilization to disturbed areas immediately after rough grading is complete.

4. Safely convey run-off from the site to a stable outlet to prevent flooding and damage to downstream facilities resulting from increased runoff from the site.

5. Retain sediment on-site as near as possible to the location where sediment originated.

6. Minimize encroachment upon watercourses and stream buffers.

3.02 SEDIMENT CONTROL

A. Construction Exit

1. Construction exit(s) shall be placed as shown on the Drawings, on the ESPCP, and as directed by the Engineer. A construction exit shall be located at any point traffic will be leaving a disturbed area to a public right-of-way, street, alley, sidewalk or parking area.

2. Placement of Construction Exit Material: The ground surface upon which the construction exit material is to be placed shall be prepared to a smooth condition free from obstructions, depressions or debris. The filter fabric shall be placed to provide a minimum number of overlaps and a minimum width of one foot of overlap at each joint. The stone shall be placed with its top elevation conforming to the surrounding roadway elevations. The stone shall be dropped no more than three feet during construction, and shall be GA DOT Standard Specification 800, Designation #57.

3. Construction Exit Maintenance: The Contractor shall regularly maintain the exit with the top dressing of stone to prevent tracking or flow of soil onto public rights-of-way and paved surfaces as directed by the Engineer.

4. Construction Exit Removal: Construction exit(s) shall be removed and properly disposed of when the disturbed area has been properly stabilized, the tracking or flow of soil onto public rights-of-way or paved surfaces has ceased and as directed by the Engineer.

B. Sediment Barriers

1. Sediment barriers shall include, but are not necessarily limited to, any device that prevents sediment from leaving the disturbed area and shall be installed as shown on the Drawings and as directed by the Engineer.

2. Sediment barriers shall be maintained to ensure the depth of impounded sediment is no more than one-half of the original height of the barrier or as directed by the Engineer. Torn, damaged, destroyed or washed-out barriers shall be repaired, reinforced or replaced with new material and installed as shown on the Drawings and as directed by the Engineer.

3. Silt fences, hay bales and rock check dams shall not be used in any flowing stream, creek or river.

4. Rip rap shall be placed as shown on the Drawings and as directed by the Engineer. Filter fabric shall be placed under all rip rap unless shown or specified otherwise; except that, filter fabric shall not be placed under rip rap on stream or drainage ditch crossings.

C. Temporary Grassing

1. Temporary grassing shall be used on any area within the construction limits that is not scheduled for a permanent stand of grass or mulch cover.

2. In those locations where Temporary Grassing is utilized, the grassing operation shall follow promptly behind the clearing operation as soon as the work allows.

D. Mulch Stabilization

1. Straw mulch stabilization or wood chips shall be used on any area within the construction limits that is not scheduled for a permanent or temporary stand of grass. Straw mulch shall be applied uniformly by hand or mechanical means to a depth of 6" (approximately 2 1/2 tons of dry straw per acre). To prevent displacement by wind and water after application, the straw mulch shall be pressed into the soil with a tracked vehicle or disk harrow.

2. Wood chip mulch stabilization may be used in any area when directed by the Engineer except any area where a permanent stand of grass is to be installed. Wood chips shall be spread uniformly to a depth of at least 3 inches.

E. Erosion Control Blankets

1. Erosion control blankets of an approved type shall be placed on slopes steeper than 3 horizontal to 1 vertical, on the bottom of ditches and others areas where necessary to limit erosion and facilitate the establishment of grass.

END OF SECTION

SECTION 02602

SANITARY SEWER MATERIALS

1 GENERAL

1.1 SCOPE

A. All material and equipment incorporated into the work shall be new from an approved manufacturer conforming to applicable industry standards and specifications. It shall be of the size, make, type and quality specified, or as specifically approved in writing by the Engineer.

B. Except as otherwise noted or specified in writing, the Contractor shall furnish all materials and equipment incorporated in the project.

1.2 SUBMTTTALS

A. Contractor shall submit complete shop drawings and product data on all materials to the Engineer in accordance with the requirements of Section 01300 of these Specifications.

1.3 PRODUCT HANDLING

A. Use all means necessary to protect the materials before, during and after installation and to protect the work and materials of all other trades.

B. Pipe, fittings, and valves are to be stored in a manner to ensure that dirt or other debris does not contaminate the inside of the product.

C. Gaskets, bolts, lubricant and other small accessories are to be stored in containers off the ground, under a shelter or cover out of the weather.

D. Arrange deliveries of products in accord with construction schedules, coordinate to avoid conflict with work and conditions at the site.

E. Immediately on delivery, inspect shipments to assure compliance with requirements of contract documents and approved submittals, and that products are properly protected and undamaged.

2 PRODUCTS

2.1 GRAVITY SEWER PIPE

A. All sanitary sewer pipe shall be either Polyvinyl Chloride (PVC) or Ductile Iron Pipe (DIP) as shown on the drawings and specified herein.

B. Ductile Iron Pipe (DIP)

1. Ductile iron pipe shall be manufactured and tested in accordance with AWWA C151. All pipe, except specials, shall be furnished in nominal lengths of 18 to 20 feet. Sizes will be as shown on the Drawings. All pipe shall have a minimum pressure rating as indicated in the following table, and corresponding minimum wall thickness, unless otherwise specified or shown on the Drawings:

Pipe Sizes (inches)	Pressure Class (psi)
4-12	350
14-20	250
24	200
Over 24	150

2. Ductile iron pipe shall normally be of the bell and spigot type with push-on joints, conforming to ANSI Specification A21.11, unless otherwise noted.

3. Flanged pipe with a Class 53 wall thickness shall be installed at aerial stream crossings or other locations where flanged pipe is shown on drawings. Gaskets for flanged joints shall be American Toruseal Flange Gasket or approved equal. Flanged joints shall be bolted with through-bolts except where threaded taps and stud bolts are required. Bolt length and diameter shall conform to ANSI/AWWA C115 for Class 125 flanges shown in ANSI/ASME B16.1. Bolts for flanges shall be stainless steel alloy machine bolts conforming to ASTM A-193. Nuts shall be stainless steel, heavy hex conforming to ASTM A-194.
4. Ductile iron pipe shall be manufactured by ACIPCO, U.S. Pipe or McWane.
5. Provide fittings as shown on plans and conforming to ANSI A21.10 or ANSI A21.11.
6. Provide joint restraint at all fittings on pressure pipe using mechanical joint with Megalug Series 1100 retainer glands by Ebaa Iron Sales, Inc., Eastland, TX, ONE-LOK Series SLDE by Sigma Corporation, Cream Ridge, NJ, or approved equal.
7. Solid sleeves may be used where connecting plain end ductile iron pipe. Solid sleeves shall meet the requirements of ANSI/AWWA C110 for long pattern and have a minimum pressure rating of 250 psi or a rating equal to that of the adjoining pipe, whichever is greater. Solid sleeves shall have mechanical joints.
8. The exterior of pipe and fittings for buried service shall be factory coated with an asphaltic coating conforming to AWWA C151/ANSI 21.51 for ductile iron pipe, AWWA C115/ANSI 21.15 for flanged pipe and AWWA C110/ANSI 21.10 for fittings.
9. Pipe and fittings that will be exposed or submerged shall receive surface preparation at the factory consisting of a near-white surface blasting in accordance with SSPC-SP10 followed by cleaning and coating with a two-coat factory-applied epoxy paint coating of Tnemec Series 66 epoxy or approved equal.
10. Pipe and fittings shall be cement-lined in accordance with AWWA C104/ ANSI A21.4, standard thickness, unless specified on the plans as “Protecto 401”, in which case lining for ductile iron pipe and fittings shall be a factory-applied ceramic epoxy interior lining of 40 mil nominal dry film thickness. The material shall be an amine cured novalac epoxy containing at least 20% by volume of ceramic quartz pigment equal to Protecto 401. Surface preparation, paint materials, application and quality control testing of the lined pipe shall be conducted in accordance with published specifications of the Protecto 401 lining system.
11. Coating of Bell Sockets and Spigot Ends - the gasket area and spigot end up to 6 inches back from the end of the spigot end must be coated with 6 mils nominal, 10 mils maximum using Protecto Joint Compound. The Joint Compound shall be applied by brush to ensure coverage. Care should be taken that the Joint Compound is smooth without excess buildup in the gasket seat or on the spigot ends. Coating of the gasket seat and spigot ends shall be done after the application of the lining.

C. Polyvinyl Chloride (PVC) Sewer Pipe

1. PVC pipe and fittings shall meet the requirements of ASTM D3034 (Latest Revision) for 4–inch through 15-inch diameter pipe and ASTM F679 (Latest Revision) for larger pipe. PVC pipe shall be of a thickness sufficient to meet loading conditions shown on the plans with the installed bedding and without exceeding five percent allowable deflection of the pipe. Minimum wall thickness shall be SDR 26 for pipe 15-inch and smaller per ASTM D3034 and Pipe Stiffness (PS) 115 for pipe 18-inch and larger per ASTM F679.
    a. Pipe and fittings shall have bell joints consisting of an integral wall section with elastomeric gasket joint that provides a water tight seal. Gaskets shall conform to ASTM F 477 and shall meet ASTM D 3212 “Standard Specification for Joints for Drain and Sewer Plastic Pipes Using Flexible Elastomeric Seal”. The pipe shall be capable of passing all tests which are detailed in this specification.

b. Fittings: All fittings and accessories shall be manufactured and furnished by the pipe supplier. They shall have bell and/or spigot configurations compatible with that of the pipe.

c. The manufacturer shall furnish written certification that each lot of pipe shipped to the project has been inspected, tested and meets applicable ASTM Specifications. At least one sample from each 100 pieces of pipe furnished shall be subjected to each test outlined under Section 8 of ASTM D3034. The cost of all testing shall be included in the Contractor's bid proposal and no pipe shall be installed until the testing is complete and approved by the Engineer. Pipe and fitting joints shall comply with ASTM D3212 for "Joints for Drain and Sewer Plastic Pipes Using Flexible Elastomeric Seals". Joint assemblies shall not leak when subjected to both an internal and external hydrostatic test at equivalent pressures of 10.8 psi gauge for a period of one hour. Pipes shall be tested in straight alignment, axially deflected position, and by shear load test as otherwise defined in paragraphs 7.2, 7.3, and 7.4 of ASTM D3212.

2.2 DUCTILE IRON PIPE

A. Ductile iron pipe shall be designed and manufactured in accordance with ANSI/AWWA C150/A21.50 and ANSI/AWWA C151/A21.51.

B. Ductile iron used to manufacture ductile iron pipe shall meet the following minimum physical properties.

1. Minimum Tensile Strength – 60,000 PSI
2. Minimum Yield Strength – 42,000 PSI
3. Minimum Elongation – 10 percent

C. Ductile iron pipe shall be Pressure Class 350 in accordance with ANSI/AWWA C150/A21.50.

D. Joints

1. Non-Restrained Joints
   a. Push-on joints in accordance with ANSI/AWWA C111/A21.11.
2. Restrained Joints
   a. Flex-Ring joints by American Cast Iron Pipe Company
   b. TR Flex joints by U.S. Pipe and Foundry Company
   c. Owner Approved Equal

E. Gaskets

1. Plain rubber gasket in accordance with ANSI/AWWA C111/A21.11.

F. Coatings

a. Interior
   1) Protecto 401.
b. Exterior
   1) Asphaltic coating in accordance with ANSI/AWWA C151/A21.51.

G. Acceptable manufacturers of ductile iron pipe and fittings:

1. American Cast Iron Pipe Company
2. U.S. Pipe and Foundry Company
3. McWane Ductile

2.3 DUCTILE IRON FITTINGS

A. Standard ductile iron fittings shall be designed and manufactured in accordance with

ANSI/AWWA C110/A21.10.

B. Compact ductile iron fittings shall be designed and manufactured in accordance with ANSI/AWWA C153/A21.53.

C. Ductile iron used to manufacture ductile iron fittings shall meet the following minimum physical properties.

1. Minimum Tensile Strength – 70,000 PSI
2. Minimum Yield Strength – 50,000 PSI
3. Minimum Elongation – 5 percent

D. Joints

1. Buried Fittings
   a. Mechanical joints in accordance with ANSI/AWWA C111/A21.11.
   b. Mechanical joints that require restraining shall be restrained with wedge type mechanical joint retainer glands for ductile iron pipe. Retainer glands shall be manufactured from high strength ductile iron in accordance with ASTM A536, Grade 65-45-12. Retainer gland dimensions shall be in accordance with ANSI/AWWA C111/A21.11 or ANSI/AWWA C153/A21.53.
   c. Acceptable manufacturers of retainer glands:
      1) Mega-Lug Series 1100
      2) Sigma ONE-LOK Series D-SLDE
      3) Uni-Flange Series 1400
      4) Owner Approved Equal
2. Above Grade (Non-Buried) Fittings:
   a. Flanged joints in accordance with ANSI/AWWA C110/A21.10.

E. Gaskets

1. Mechanical Joints
   a. Plain rubber mechanical joint gasket in accordance with ANSI/AWWA C111/A21.11.
2. Flanged Joints
   a. Full face, 1/8” thick, gasket with bulb-type ring(s).
   b. Gaskets shall meet the dimensions of ANSI/AWWA C115/A21.15.
3. Hardware
   a. Mechanical Joints
      1) Bolts shall be low carbon steel, zinc plated, tee-head bolts in accordance with ANSI/AWWA C111/A21.11.
      2) Nuts shall be low carbon steel, zinc plated in accordance with ANSI/AWWA C111/A21.11.
   b. Flanged Joints
      1) Bolts shall be heavy hex type, low carbon steel, zinc plated in accordance with ASTM A307, Grade B.
      2) Nuts shall be heavy hex type, low carbon steel, zinc plated in accordance with ASTM A563, Grade A.
      3) Washers shall be SAE flat washers, low carbon steel, zinc plated in accordance with ASTM F844.
4. Coatings

a. Buried Fittings

1) Interior

a) Protecto 401.

2) Exterior

a) Asphaltic coating in accordance with ANSI/AWWA C151/A21.51.

b. Above Grade (Non-Buried) Fittings

1) Interior

a) Protecto 401.

2) Exterior

a) Universal primer

F. All ductile iron pipe and fittings used on a project shall be new and shall be the product of a single manufacturer, unless otherwise approved by the Owner.

G. Acceptable manufacturers of ductile iron pipe and fittings:

1. American Cast Iron Pipe Company
2. U.S. Pipe and Foundry Company
3. McWane
4. Sigma

2.4 PRECAST MANHOLES

A. Unless otherwise approved all new manholes shall be precast manholes manufactured in accordance with A.S.T.M. C478. Precast manholes shall be constructed of Portland cement concrete with a compressive strength of not less than 4,000 pounds per square inch at an age of 28 days. The minimum inside diameter shall be 4 feet; wall thickness shall be not less than 5 inches; manholes 0-16' deep shall have Class 3 reinforcing, 16-22' deep, Class 4 and 22-28' deep, Class 5. Joints in the wall shall be tongue and groove with preformed butyl rubber sealant equal to Kent Seal No. 2. The design, the materials used in the manufacturing process and the transportation of precast manhole shall be subject to inspection at any time by the Engineer. Materials found defective by the Engineer will not be delivered to the job site. Material on the job site that is found defective shall be moved immediately after being notified that such material is unacceptable. Drop type manholes shall be required where the invert of any incoming line will be higher than two feet from the invert of the outlet pipe.

B. Exterior sealing of riser joints. Each manhole joint shall be sealed with an external rubber sleeve similar to the Infi-Shield Seal Wrap as manufactured by Sealing Systems, Inc. (763-478-2057). The seal shall be made of EPDM (Ethylene Propylene Diene Monomer) rubber with a minimum thickness of 30 mils. The back side of each unit shall be coated with mastic. The mastic shall be non-hardening butyl rubber sealant, with a minimum thickness of 187 mils. The seal shall be designed to prevent leakage of water through the joint sections of the manhole.

C. Connections to pipes. Pre-molded rubber boots with stainless steel bands shall be used for connecting sewer pipe to manholes. These may be either the lock-in "Kor-N-Seal" type as manufactured by National Pollution Control Systems, Inc. or the cast-in type as manufactured by Interpace Division of Ball Rubber, Inc. In all cases the boot shall be sized to suit the outside diameter of the type pipe being used.

D. Manhole Steps. Manhole steps shall be slip-proof conforming to the applicable provisions of ASTM Specification C-478, latest edition, and shall be 0.5-inch minimum diameter deformed reinforcing steel, Grade 60 standards conforming to ASTM A-615, covered with polypropylene plastic or rubber and supplied with depth rings and other necessary appurtenances. Steps shall be "PS1-PF" by M. A. Industries, Inc. of Peachtree City, Georgia, or similar model as manufactured by American Step Company of Griffin, Georgia,

or approved equal. The steps shall be factory built into the precast sections.

E. Watertight Manhole Frame and Cover. All manholes on this project shall be furnished with a watertight frame and cover and shall be cast iron with a coat of asphaltic paint applied at the foundry and with a “bolted-down” lid. All covers shall have “Sewer” printed on them. Manhole frame and covers shall be as manufactured by Neenah Foundry Company R-1915-F2 (435 lbs.) or approved equal. Manhole frames shall be cast in the cone or top slab for all manholes located in non-traffic areas. The minimum clear opening of the cover shall be 22 inches. On “loose-set” frame and covers, install Sealing Systems, Inc., “Flex-Seal Utility Sealant” to the interior surface of the chimney and frame area of the manhole per the manufacturer’s recommendations after the frame has been grouted in-place.

F. Inverts. Manhole inverts shall be constructed of Portland cement concrete conforming to the lines and dimensions shown on details.

2.5 STEEL CASING PIPE

A. Casing pipe shall be seamless steel pipe in accordance with ASTM A139, Grade B.

1. Minimum Thickness: ¼” or as required by DOT or other governing body having jurisdiction over the crossing.
2. Minimum Tensile Strength: 60,000 PSI
3. Minimum Yield Strength: 35,000 PSI
4. Minimum Elongation in 2 Inches: 25%
5. Casing pipe shall have no mid-welds.

B. Steel casing pipe shall be coated on the interior and exterior with bituminous asphalt.

2.6 CASING SPACERS

A. Casing spacers shall be Model CCS as manufactured by Cascade Waterworks Manufacturing Company of Yorkville, IL. Other acceptable manufacturers are BWM Company of Forest City, North Carolina, and Pipeline Seal & Insulator, Inc. of Houston, Texas. Two casing spacers shall be installed for each 18- to 20-foot long joint of pipe.

2.7 COMBINATION AIR/VACUUM VALVES

A. Combination air/vacuum valves shall be suitable for sanitary sewage service.

B. Valve body shall be Type 316 stainless steel.

C. Maximum Operating Pressure: 250 PSI

D. Operating Range: 0 to 250 PSI

E. Air Release Capacity: 260 CFM

F. Connection:

1. 2” to 3”: FNPT
2. 4” and Larger: AWWA C115/ANSI B16.1

G. Acceptable Manufacturers:

1. H-Tec Model 986

2.8 SURGE RELIEF VALVES

A. General

1. Surge relief valves shall be suitable for sanitary sewage service. Unless otherwise specified, surge relief valves shall be of a straight through “Wye” body configuration with external springs and hydraulic cushioning system and shall provide drip tight closure. Its function shall be to protect the pump system from destructive surge pressures resulting from abrupt flow stoppages. The main valve shall be capable of opening full port area with a minimum increase in inlet pressure. The cushion system shall permit a full range of adjustment for closing speeds to prevent hammer of bang.

B. Valve body shall be of cast iron ASTM A126, Grade B. Flanges shall be flat-faced and flange drilling shall be in accordance with ANSI B16.1 Class 125.

C. Valve disc shall be of cast iron ASTM A126, Grade B. The disc movement shall be guided for proper alignment throughout its stroke.

D. Valve shall have a resilient replaceable seat firmly held in place by a bronze ASTM B62 ring fastened to the disc with screws.

E. Valve external springs shall be enclosed in protective casings and shall be in compression. Springs that appear to be under extension are not permitted.

F. Acceptable Manufacturers:

1. GA Industries.
2. Ross Valve
3. Engineer Approved Equal.

2.9 BALL VALVES

A. Threaded, 2-piece, standard port ball valves.

B. Body: Type 316 stainless steel (CF8M)

C. Ball: Type 316 stainless steel (ASTM A276)

D. Stem: Type 316 stainless steel (ASTM A276)

E. Packing: PTFE

F. Cold Working Pressure: Minimum 600 PSI

G. End Connections: FNPT x FNPT

H. Lever: Type 304 stainless steel with vinyl cover

I. Manufacturers

1. Conbraco Industries, Apollo Valves
2. Nibco, Inc.
3. Owner Approved Equal.

2.10 SWING CHECK VALVES

A. VALVES 3-INCHES AND LARGER:

1. Manufacturers:

a. Dezurik
b. Val-Matic Swing-Flex (Series 502)
c. APCO Series 100 as manufactured by Valve & Primer Corp., Schaumburg, Illinois.
d. American Flow Control, Series 2100
e. Or approved equal.

B. The rubber flapper swing check valve shall have a heavily constructed ductile iron body and cover. The body shall be long pattern design (not wafer), with integrally cast-on end flanges. The flapper shall be Buna-N having an “O” ring seating edge and be internally reinforced with steel.

C. The flapper to be captured between the body and the body cover in a manner to permit the flapper to flex from closed to full open position during flow through the valve. The flapper shall be easily removed without the need to remove the valve from the line. Check valves to have full pipe size flow area. The seating surface to be on a 45-degree angle requiring the flapper to travel only 35 degrees from closed to fully open position, for minimum head loss and non-slam closure.

D. Provide Type 316 stainless steel bolts and nuts for all flanged connections.

2.11 PLUG VALVES

A. Eccentric plug valve.

B. Valve body shall be ASTM A126, Class B ductile iron.

C. Valve plug shall be Type 316 stainless steel with resilient coating.

D. Valve stem shall be Type 316 stainless steel.

E. Minimum 175 PSI working pressure for valves less than or equal to 12” in size. Minimum 150 PSI working pressure for valves greater than 12” in size.

F. Operators:

1. In Vault: Handwheel.

2. Buried: Square Nut, Worm Gear Actuator

G. Rotary type actuator

H. End Connections:

1. Buried Valves: MJ x MJ

2. Non-Buried Valves: FLG x FLG

I. Interior and exterior surfaces shall be coated with fusion-bonded epoxy coating.

J. Acceptable Manufacturers:

1. M&H Valve Company

2. Val-Matic Valve & Manufacturing Corporation

3. Owner Approved Equal

2.12 BACKFILL MATERIAL - GENERAL

A. Soil backfill material within one foot of the pipe shall be clean, dry soil free of topsoil, organic matter, dirt clods, rocks or stone larger than two inches, trash or any other foreign material.

B. Soil backfill material outside of the one-foot zone from the pipe shall normally be native soil material that was removed from the trench, except in paved areas or developed areas where use of such material could cause a problem. In cases where the native material is not suitable for backfill, select soil backfill will be hauled in and placed for trench backfill. In no case shall any organic material such debris from trees or other trash be placed in the backfill. Backfill materials shall be subject to the approval of the Engineer.

C. Details of pipe bedding and backfill are included in the Drawings. Soil and granular materials are per the Unified Soil Classification System (ASTM D2487), with the exception that bedding/backfill adjacent to the pipe is limited to 2” maximum particle size per ANSI/AWWA C600 as described in Paragraph A above.

2.13 TRENCH AND STRUCTURAL BACKFILL

A. Subgrade stabilizer shall consist of crushed stone meeting size and gradation requirements for Georgia DOT Standard Specification Section 800, #57 or #78 designation.

2.14 SERVICE CONNECTIONS

A. Service connections to PVC sewer mains shall utilize a PVC wye fitting or saddle tee with gasketed joints matching those of PVC sewer pipe.

B. Service connections to Ductile Iron Pipe shall be made by either of the following methods:

1. By coring a precise hole in the DIP main at 30 to 45 degrees from the top and installing a watertight compression fitting with a bell hub and stainless-steel band for transition to PVC service pipe such as the assembly by INSERTA Fittings Company or approved equal.

2. An alternate method is to utilize a PVC wye fitting with a one-foot long section of plain end pipe inserted in the bell end and having two transition adapters (Fernco or equal)

from PVC to DIP.

2.15 TRANSITION ADAPTERS

A. Transition from Ductile Iron Pipe to PVC, or any differing types of pipe, shall be accomplished with a watertight coupling. Couplings shall be made of flexible rubber to fit over plain ends of pipe and have stainless steel bands for tightening to a completely watertight joint. Couplings for transition from DIP to PVC shall be Fernco Style 1051 or approved equal.

2.16 ASPHALT

A. Asphalt paving installed in conjunction with sewer construction shall be Hot Mix Asphaltic Concrete conforming to Georgia DOT Specification 828. The particular mix type shall be based on the application thickness and shall be subject to approval by Engineer.

2.17 CONCRETE

A. Concrete installed in conjunction with sewer construction shall be Portland Cement Concrete having 3,000 psi design strength and meeting Georgia DOT Specification 500 for Class A concrete.

2.18 LOCATOR TAPE

A. All buried PVC or other non-metallic sewer pipe shall be marked continuously with metalized locater tape placed approximately 18 inches below grade directly above the top of the pipe. Locator tape shall be green and shall be labeled “Sewer”.

3 EXECUTION

A. Refer to Section 02612 of these technical specifications.

** END OF SECTION **

SECTION 02612
SANITARY SEWER CONSTRUCTION

1 GENERAL

1.1 WORK INCLUDED

A. The work covered in this section includes furnishing all labor, tools, equipment, materials and incidentals necessary to construct sewer lines and associated work as shown on the drawings and as specified herein.

1.2 RELATED WORK

A. Also see the following section which contains provisions that apply specifically to the work described in this section.

B. Section 02000, General Construction Requirements, which applies to all activities under this section.

2 PRODUCTS
(See Section 02602 and other sections of these specifications)

3 EXECUTION

3.1 CLEARING AND GRUBBING

A. Where necessary, the Contractor shall clear and grub a sufficient width along the pipeline to permit installation of the work. Except at locations noted on the drawings, the minimum width of the cleared and grubbed area shall be the width of the permanent easement and the maximum shall be the width of the construction easement. In certain areas where a 30-foot permanent width is shown, Contractor may clear a 20-foot width only if this width is adequate to install the pipeline. Disposal of all trees, shrubs and debris shall be the responsibility of the Contractor who shall comply with all state and local laws and regulations including any burning bans in effect at the time of construction. The Contractor shall clear only that area of the construction site that has adequate erosion and sedimentation control in place.

B. The debris resulting from the clearing and grubbing operation shall be hauled to a disposal site secured by the Contractor and shall be disposed of in accordance with all requirements of federal, state, county and municipal regulations. In no case shall any material or debris be left on the project, placed on abutting private properties or buried on the project. Trees, stumps, brush or other clearing debris may be used within the construction easement only if ground into wood chips and used as mulch for erosion and sedimentation control.

3.2 TRENCH AND MANHOLE EXCAVATION

A. It is the responsibility of those installing sanitary sewers to conform to OSHA regulations, 29 CFR Part 1926, Subpart P, Paragraph 1226.650 through A26.653 and any other applicable sections during trench excavation. All excavations shall be adequately guarded with barricades and lights in compliance with all OSHA and Georgia Department of Transportation requirements so as to protect the public from hazard. Excavations adjacent to existing or proposed buildings and structures or in paved streets or alleys shall be sheeted, shored and braced adequately to prevent undermining or subsequent settlement of such structures or pavements. Underpinning of adjacent structures shall be done when necessary to maintain structures in a safe condition.

B. Excavation shall be by open cut from the ground surface, unless otherwise called for on the plans or allowed by the Engineer. Pipe trench shall be excavated straight and true to grade and line. Trench preparation shall proceed in advance of pipe installation only so far as can be backfilled the same day. Trench shall not be excavated more than 300 feet in advance of pipe installation.

C. Trench widths for sewer pipe shall have a maximum width, measured at the center line of the pipe, equal to the nominal diameter of the pipe, plus 2'-0". The trench may have a greater width than this, beginning at one foot above the top of the pipe and extending to the top of the ground, if such width is necessary or desirable.

D. Rock Excavation

1. Trench rock is defined as any material which cannot be excavated with a backhoe having a bucket curling force rated at 25,700 pounds (Caterpillar Model 225 or equivalent), and occupying an original volume of at least one-half cubic yard.
2. Rock in trenches shall be excavated over the horizontal limits of excavation to a minimum of 4 inches on all sides and under the pipe to provide a cushion of #57 crushed stone.
3. Blasting operations shall be conducted in strict accordance with all existing ordinances and regulations and shall be done by persons licensed to use explosives. No blasting shall be done less than 50 feet in advance of the completed work. Contractor shall be responsible for obtaining any blasting permits required.
4. All exposed structures shall be carefully protected and where necessary, the blast shall be covered with suitable mats. Any damage caused by blasting shall be promptly repaired by the Contractor at his expense. Explosives and other blasting supplies shall be stored in accordance with all federal, state and local ordinances.

E. Subgrade Stabilizer

1. In the event that the subgrade under the pipe or other structure does not provide a suitable foundation for the pipe or other structure and when so directed by the Engineer, the said subgrade shall be stabilized by undercutting below the normal trench bottom to remove unstable material. Stabilizer stone, Georgia DOT no. 57 crushed granite, shall be placed to the depth required to stabilize the trench bottom.

F. Wherever streets, roads, or driveways are cut, they shall be immediately backfilled and compacted after the pipe is installed and shall be maintained in first-class condition and passable at all times until re-surfaced. Reasonable and satisfactory provisions shall be made by the Contractor to allow travel on walkways and driveways by installing temporary crossings.

G. Excavation materials shall be so placed as not to endanger the work and so that free access may be had at all times to all parts of the trench and to fire hydrants and water valve boxes.

H. Backfilling, compaction, dressing and clean-up shall be kept as close to the line-laying crew as is practical, and negligence in this feature of the work will not be tolerated.

3.3 PIPE BEDDING AND HAUNCHING

A. Trenches shall be kept free of water. Pipe shall not be installed in water or unstable foundation. All water pumped, bailed or otherwise removed from the trench or other excavation shall be conveyed in a proper manner to a suitable place of discharge where it will not cause injury to the public health or to public or private property or to work completed or in progress, or to the surface of the streets or cause any interference with the use of same by the public. The contractor will be required to provide and operate any equipment necessary to keep the trenches free from water while pipe is being laid and the joints made.

B. The trench shall have smooth, even bottom affording the pipe support throughout its length between bell holes. Bell holes shall be dug sufficiently large for proper joining of the pipe. Blocking under the pipe to bring the pipe to grade or any other method that causes point loading shall not be allowed.

C. Pipe bedding (the area below the bottom of the pipe barrel) shall be as shown on the drawings. The bedding shall be placed on a flat trench bottom with a minimum thickness

beneath the pipe of one-eighth the outside pipe diameter, but not less than 4 inches and sliced under the haunches of the pipe with a shovel or other suitable tool to a height of one-half the outside pipe diameter. For ductile iron pipe, the pipe bedding shall be in accordance with the following table and the details shown on the drawings, except that restrained joint pipe shall use Type 4 bedding, unless the depth of cover is exceeded, in which case Type 5 shall be used.

Size in.	Pressure Class	LAYING CONDITIONS Maximum Depth of Cover in Feet		
		Type 3	Type 4	Type 5
4	350	69.0	85.0	100.0
6	350	37.0	47.0	65.0
8	350	25.0	34.0	50.0
10	350	19.0	28.0	45.0
12	350	19.0	28.0	44.0
14	250	15.0	23.0	36.0
16	250	15.0	24.0	34.0
18	250	14.0	22.0	31.0
20	250	14.0	22.0	30.0
24	200	12.0	17.0	25.0

3.4 INSTALLATION OF SEWER PIPE

A. Pipe and accessories shall at all times be handled with care to avoid damage. Whether moved by hand, skidways or hoists, material shall not be dropped or bumped. The interior of all pipe shall be kept free from dirt and foreign matter at all times. Each joint of pipe shall be unloaded near the place where it is to be laid in the trench.

B. All pipe and accessories shall be inspected prior to lowering into the trench. Material that is defective in manufacture or has been damaged in transit or after delivery shall be removed from the job site.

C. Sewer pipe shall be joined by "push-on" joints using elastomeric gaskets to effect the pressure seal. The ends of pipe to be joined and the gaskets shall be cleaned immediately before assembly, and the assembly shall be made as recommended by the pipe manufacturer. Lubricant used must be non-toxic and supplied or approved for use by the pipe manufacturer. Sewer pipes shall be laid in the uphill direction with the bells pointing upgrade.

D. Pipe grades shall be maintained by the use of a laser and verified with a surveying level and rod on an ongoing basis. The Contractor shall be responsible for staking both line and grade and the correctness thereof. Subsidiary lines and grades shall be laid out by the Contractor from the controlling lines and bench marks established by the Engineer, or from the measurements shown. All lines and grades shall be subject to checking by the Engineer, but that checking shall in no way relieve the Contractor from the responsibility for maintaining correct line and grade. The Contractor shall provide such stakes, materials, survey instruments, labor and assistance as the Engineer may require in laying-out work, establishing bench marks, and checking and measuring the work.

E. No section of pipe shall be laid until the preceding section has been belled and bedded.

F. When pipe laying is not in progress, the open ends of installed pipe shall be plugged by approved means to prevent entrance of trench water or debris into the line.

G. Wyes and/or service connections and stubouts from manholes shall be placed where shown on plans and as directed by the Engineer. Stubouts shall be made with PVC pipe unless otherwise shown on the drawings. All such connections shall be plugged with suitable plug or stopper and made watertight with hydraulic grout, if necessary, and shall be marked at ground level with a suitable marker for future location.

H. Sewer lines should be installed at least 10 feet horizontally from existing or proposed water mains. Sewers crossing water mains should be installed to provide a minimum vertical distance of 18 inches between the outside of the water main and the outside of the sewer.

I. Sections of polyethylene pipe should be joined into continuous lengths on the jobsite above ground. The joining method shall be the butt fusion method and shall be performed in strict accordance with the pipe manufacturer's recommendations. The butt fusion equipment used in the joining procedures should be capable of meeting all conditions recommended by the pipe manufacturer, including, but not limited to, temperature requirements of 400 degrees Fahrenheit, alignment, and an interfacial fusion pressure of 75 PSI. The butt fusion joining will produce a joint weld strength equal to or greater than the tensile strength of the pipe itself. All field welds shall be made with fusion equipment equipped with a Data Logger. Temperature, fusion pressure and a graphic representation of the fusion cycle shall be part of the Quality Control records.

J. Sidewall fusions for connections to outlet piping shall be performed in accordance with HDPE pipe and fitting manufacturer’s specifications. The heating irons used for sidewall fusion shall have an inside diameter equal to the outside diameter of the HDPE pipe being fused. The size of the heating iron shall be ¼ inch larger than the size of the outlet branch being fused.

K. Mechanical joining will be used where the butt fusion method cannot be used. Mechanical joining will be accomplished by either using a HDPE flange adapter with a Ductile Iron back-up ring or HDPE Mechanical Joint adapter with a Ductile Iron back-up ring.

L. Socket fusion, hot gas fusion, threading, solvents, and epoxies will not be used to join HDPE pipe.

3.5 BACKFILLING

A. Backfilling shall be carried along as closely to pipe laying as possible. Not more than 100 feet on trench shall be opened on any line in advance of pipe laying. The length of the trench to be opened in advance of the completed work shall be reduced where appropriate for the convenience and safety of the persons residing in the vicinity of the work. The maximum length of trench left open overnight shall not exceed three times the depth of the trench. All openings shall be surrounded by barricades at night with blinker lights not more than ten feet apart around the opening.

B. As each section of the line is completed, the trench shall be carefully backfilled. No length of pipe shall be installed until one preceding it shall have sufficient quantity of backfill tamped around it to hold it firmly in place. Pipe haunching (the area above the bottom of the barrel of the pipe up to a line one-half of the pipe outside diameter) and initial backfill (the area above the haunching material and below a plane 12 inches above the top of the barrel of the pipe) shall be as shown on the drawings. Material used for pipe haunching shall be shovel sliced or otherwise placed to provide uniform support for the pipe barrel and to fill completely all voids under the pipe.

C. When sheeting or a trench box is used during excavation, before the sheeting or trench box is removed, it shall be raised in place to just above the pipe crown to safely allow the Contractor to completely fill any voids left in the pipe zone.

D. No excavation shall be made under highways, streets, alleys or private property until satisfactory arrangements have been made with the State, City, County, or Owners of the property to be crossed.

E. Final backfill (the area above a plane 12 inches above the top of the pipe) shall be placed in 6" layers and tamped so that after consolidation, the dry weight shall be not less than 85% of the maximum laboratory dry weight per cubic foot as determined by ASTM Method D-698. The soil in trenches within roadways (including shoulders) and paved areas shall be compacted to a dry density of 95% of ASTM Method D-698. The standard maximum dry density and the optimum moisture shall be determined by the same method.

3.6 STEEL CASING INSTALLAITON

A. Steel Casing pipe shall be installed by the "Jack and Bore" procedure, the "Open-Cut" method or by microtunneling. Steel casing pipe shall be installed at the specific locations called for on the plan sheets and the installation method shall be by the "Jack and Bore" or microtunneling procedure unless specifically stated to be installed by the "Open-Cut" method.

B. The "Jack and Bore" installation procedure shall be by the dry-bore method. The hole is to be mechanically bored and cased through the soil by a cutting head on a continuous auger mounted inside the casing pipe. The installation of the casing and boring of the hole shall be done simultaneously by jacking. Lengths of pipe are to be continuously welded the full circumference of the pipe diameter to the preceding section installed. Excavation material will be removed and placed at the top of the working pit. Backfill materials and methods of backfilling and tamping shall be as required under BACKFILLING.

C. The "Open-Cut" method consists simply of excavating the trench along the pipeline route and placing the steel casing in the trench. Special care shall be taken not to damage any existing utilities as the sections of casing are maneuvered into the open trench. Lengths of pipe are to be continuously welded the full circumference of the pipe diameter to the adjacent sections. Backfill materials and methods of backfilling and tamping shall be as required under BACKFILLING.

D. Casing spacers shall be used while installing the sewer inside the casing. Spacers shall be located within 2' of each end of the casing and spaced no more than 10' apart within the casing. After the sewer is installed in the casing, a check shall be made to ensure that the carrier pipe is not touching the casing at any point. The ends of the casing pipe shall be sealed with a three course mortared brick wall, one course of which shall be erected inside the casing.

E. Construction techniques required to provide access for casing shall be such as to ensure the safety of the work. Final dimensions of access pits selected by Contractor shall conform as with minimum dimensions required to permit the installation of the work. The contractor shall be required to properly support all excavations and to prevent all movement of the soil, pavement, utilities or structures outside of the excavation. All pits shall conform to applicable Local Safety Standards, OSHA Standards, trenching and shoring standards. Provide surface drainage during the period of construction to protect the work.

F. Casing will be installed in accordance with the line and grade shown on contract drawings.

G. The contractor is totally responsible for the performance of the equipment and methods selected for this phase. Each pipe section shall be jack forward as the excavation progresses in such a way to provide complete and adequate ground support at all times. Lubrication shall be applied to the external surface of the pipe to reduce skin friction. A jacking frame shall be positioned to develop a uniform distribution of ramming forces around the periphery of the pipe. The Contractor is responsible for monitoring ground movements associated with the work and making suitable changes in the construction methods to control ground movements and prevent damage or detrimental movement to the work and adjacent structures and pavements. A lubrication system shall be provided that injects an approved lubricant on the inside and outside of the pipe to lower the friction developed on the sides of the pipe during jacking. The overcut on the pipe shall not exceed 1 inch. The annular space created by the overcut shall be filled with a lubricant that has been proved suitable for the particular soil conditions.

H. Welds shall be complete around the casing joints and smooth to permit the passage of carrier spacers. The line and grade shall not vary within the overall casing. The installation shall permit the continuous installation of the carrier pipe with spacers.

3.7 MANHOLE INSTALLATION

A. The manhole base shall be set upon a 6 inch (minimum thickness) mat of #57 crushed stone.

B. The invert of manholes shall be constructed of either brick and mortar or 2500 psi concrete and shall have a cross section of the exact shape of the invert of the sewer which it connects, changes in size and grade being made gradually and evenly. Changes in the direction of the sewer and entering branch or branches shall have a true curve of as large a radius as the size of the manhole will permit. Drop manholes will be required where the invert of any incoming line will be higher than two feet from the invert of the outlet pipe. All manholes shall be water tight when completely built.

C. Masonry work shall be allowed to set for a period of not less than 24 hours. All loose or waste material shall be removed from the interior of the manhole. The manhole cover then shall be placed and the surface in the vicinity of the work cleaned off and left in a neat and orderly condition.

D. The cast iron frame for the manhole cover shall be set at the required elevation and properly anchored to the masonry. Where manholes are constructed in paved areas, the top surface of the frame and cover shall be shimmed, if necessary, to conform to the exact slope, crown and grade of the existing adjacent pavement. Shims shall be one of the manufactured systems designed for this purpose, or properly constructed masonry that provides full support to the manhole frame. In unpaved areas, manhole frames and covers shall be cast into the cone or top sections of the precast manholes, and the top shall be terminated higher (from a few inches in mowed areas to 18 inches in wooded areas) than surrounding grade and the soil shall be graded to drain away from the manhole.

E. All manholes shall be water tight when completely built.

3.8 CONNECTION OF SEWER MAINS

A. An approved Shear Band Fernco Adaptor shall be used for connecting sewer pipes in any situation where a gasketed bell to spigot connection is not possible. The adapter shall provide a fully watertight connection. Care shall be taken not to disturb the original bedding of the existing pipe outside the area required for the proper installation of the adaptor. The adaptor shall be bedded and covered with #57 stone.

3.9 CONNECTION OF SEWER SERVICE LINES

A. All existing sewer service lines connected to the existing sewer main shall be located by internal televising of the main. Televising will be performed by a qualified company routinely engaged in this type work. A written log will be prepared during the televising operation listing the location and position of each service connection and recording, either digital or tape, will be provided for a permanent record of the televising. Unless otherwise directed, all existing service connections will be reconnected to the new sewer main.

B. Service connections to the main will be made using the materials outlined in Section 02602 at the main. Connection of new service pipe to existing service pipe will use PVC pipe of the same size as the existing service and an approved Shear-band Fernco adaptor.

C. Where sewer services are installed at vacant lots under this contract, the Contractor shall install a 2” x 2” pressure treated wooden stake, 3-feet long, as a visual marker directly above the end point of the sewer service. The marker shall extend 2 feet above ground and be painted orange.

3.10 PLACING OF STEEL CASING PIPE

A. Steel casing pipe shall be installed by the "Jack and Bore" procedure unless otherwise stated at any specific location on the drawings.

B. The "Jack and Bore" installation procedure shall be by the dry-bore method. The hole is to be mechanically bored and cased through the soil by a cutting head on a continuous auger mounted inside the casing pipe. The installation of the casing and boring of the hole shall be done simultaneously by jacking. Lengths of pipe are to be adequately welded to the preceding section installed. Excavation material will be removed and placed at the top of the working pit. Backfill materials and methods of backfilling and tamping shall be as called for elsewhere in this section.

C. For locations other than the crossing under Interstate 20, prior to installation of the steel casing pipe, the contractor shall dig or drill exploratory test holes to determine the existence of solid rock. The testing procedures may be accomplished by either test drilling or excavation at the proposed location of the bore and to at least three feet below the proposed depth. As a minimum, these tests are to be conducted at each end of each proposed casing location. Where the casing length exceeds 100 feet or where rock is evidenced, there shall be additional exploratory test holes placed along the length such that the average distance between holes is not more than 50 feet. Contractor shall provide Engineer with written results of exploratory drilling prior to mobilizing for the boring operation. Failure of the Contractor to comply with this provision will make the contractor ineligible for any compensation associated with encountering of rock in the attempted bore.

D. If exploratory drilling indicates rock in the line of the bore, then an alternate location will be selected by the Engineer for the bore or other provisions will be chosen. After a suitable location is chosen and the placing of casing pipe begins, Contractor shall immediately notify Engineer if rock is encountered.

E. Bore pits for cased bores and uncased bores shall be constructed as needed to avoid conflicts with existing utilities and still remain in the limits of the construction area. Bore pits shall be constructed, marked and barricaded to comply with applicable safety regulations.

F. Casing spacers shall be placed on the carrier pipe to center it and restrain it in position inside the casing. Two spacers per joint of pipe shall be attached within one foot of the pipe joint. Spacers shall be of an approved design and manufacturer and shall be made of stainless and/or dense polymer, and shall be capable of the load applied by the pipe when full of water with a safety factor of at least 2.0.

G. If required by local or state authorities, casings installed under roadways shall be grouted to fill the annular space between the casing and the carrier pipe. Grout shall be pumped through small pipes inserted into the space to ensure full penetration and filling. Grout for this purpose may be one of the special mixtures of low density, air-entrained grout designed for pumping.

3.11 AERIAL STREAM CROSSINGS

A. Aerial crossings of streams are to be constructed at locations shown on drawings and in accordance with the following requirements:

1. Excavations for concrete piers shall extend down to firm soil, at least one foot below the elevation of the stream bed. Contractor shall coordinate a geotechnical inspection to confirm soil bearing, and after soil bearing is confirmed shall place an 18 inch thick bedding of no. 57 stone approximately 6 feet in diameter. Dewatering will be performed as needed to provide a stable foundation for the work.

2. Concrete for the piers shall meet the requirements specified under Section 2602 of these specifications. Forming for the piers shall be treated paper fiber Sonotube or approved equal forming product.

3. Vertical reinforcing steel for each pier shall be eight no. 5 bars spaced evenly around a circle of 12 inch radius. Vertical bars shall be enclosed with standard hoop rings of no. 4 bars spaced at 10 inches apart.

4. Tops of piers will terminate one inch below the outside bottom of the sewer pipe. Pipes shall be anchored to piers with ¾ inch diameter, all-thread, 316 stainless steel bolts embedded 6 inches into concrete. A stainless steel strap, 2” wide x 3/8” thick and curved to cradle the pipe, will be placed below the pipe on leveling nuts for vertical adjustment. A similar strap curved to cover half the pipe diameter will be place over the top of the pipe and bolted to the anchor bolts.

5. Pipe for aerial crossings shall be flanged pipe as specified in Section 02602.

6. Rip-rap and filter fabric shall be placed as shown on drawings, ensuring that the flow path beneath the pipe remains unobstructed at least to its original profile and cross section.

3.12 FIELD TESTING OF SEWERS

A. Field Testing

1. After completion of any section of gravity pipeline and before placing a section into operation the grades, joints, and alignment shall be true to line and grade. Joint surfaces shall be smooth. There shall be no visual leakage and the sewer shall be completely free from any cracks and from protruding joint materials, deposits of sand, mortar, or other materials on the inside.
2. As a minimum the completed pipeline will be subjected to the following tests:
   a. Leakage test
   b. Visual straightness test
   c. Slope measurement
   d. Mandrel test for PVC pipe
3. The Contractor will be required to furnish pipe plugs, weirs, cords, mandrels and any other customary devices needed to carry out the above-listed tests at no added cost. He will also furnish supervision and labor to carry out these tests in the presence of the Engineer.

B. Leakage Testing

1. Infiltration or exfiltration testing in accordance with ASTM C-1091, may be used in lieu of air testing provided the test is conducted with at least two feet of head above the top of the pipe being tested. Allowable infiltration or exfiltration shall not exceed 25 gallons per 24 hours per inch of diameter per mile of pipe. Contractor shall furnish all supplies, materials, labor, and services needed to make infiltration or exfiltration tests including water. No separate payment will be made for equipment, supplies, material, water, or services.
2. Any leakage exceeding the allowable amount shall be corrected by an approved method until the pipelines meet the requirements of the allowable leakage specifications. Any visible flow (not including seepage) in manholes shall be repaired.
3. Infiltration tests shall be made when groundwater level is 18-inches or more above the top of the outside of the pipe.
   a. When normal groundwater does not stand at a level outside the pipe to enable infiltration tests to be made to the satisfaction of the Engineer, the Contractor shall make exfiltration tests by filling the pipe or sections thereof with water to a head of not less than 2 feet above the top of the outside of the pipe and observing the amount of water required to maintain this level.
   b. Low pressure air testing may be used in lieu of infiltration testing at the Contractor's request. A Low Pressure Air Test shall be made in accordance with ASTM F 1417, as indicated below:
      1) Clean pipe to be tested by propelling snug-fitting inflated rubber ball through pipe with water.
      2) Plug all pipe outlets with suitable test plugs. Brace each plug securely to prevent blowouts. As a safety precaution, pressurizing equipment shall include a regulator set at slightly above test pressure to avoid over-pressurizing and damaging an otherwise acceptable line. No one shall be allowed in the manhole during testing.
      3) If the pipe to be tested is submerged in groundwater, insert a pipe probe by boring or jetting, into the backfill material adjacent to the center of the pipe, and determine the pressure in the probe when air passes slowly through it. This is the back pressure due to groundwater submergence over the end of the probe. All gauge pressures in the test should be increased by this amount.

4) Add air slowly to the portion of the pipe installation under test until the internal air pressure is raised to 4.0 psig.

5) After an internal pressure of 4.0 psig is obtained, allow at least two minutes for air temperature to stabilize, adding only the amount of air required to maintain pressure.

6) When pressure decreases to 3.5 psig, start stopwatch. Determine the time in seconds that is required for the internal air pressure to reach 2.5 psig. Minimum permissible pressure holding times for runs of single pipe diameter are indicated in the table below in seconds. Times for mixed pipe sizes of varying lengths should be calculated as described in ASTM C 828-76T using formula t = K x d/q (q = 0.0020).

Minimum Test Time for Various Pipe Sizes			
Nominal Pipe Size (inches)	T (time) Min/100 feet	Nominal Pipe Size (inches)	T (time) min/100 feet
3	0.2	21	3.0
4	0.3	24	3.6
6	0.7	27	4.2
Minimum Test Time for Various Pipe Sizes			
8	1.2	30	4.8
10	1.5	33	5.4
12	1.8	36	6.0
15	2.1	39	6.6
18	2.4	42	7.3

C. Leakage Testing of Manholes

1. Prior to testing manholes for watertightness, all lift holes shall be plugged with a non-shrink grout, all joints between precast sections shall be properly sealed and all pipe openings shall be temporarily plugged and properly braced. Each manhole shall pass one of the following tests:

   a. Exfiltration Tests: The manhole, after proper preparation as noted above, shall be filled with water. The maximum allowable leakage shall be 0.1 gallon per hour per foot of diameter per foot of depth. Tests shall last a minimum of eight hours. The manholes may be backfilled prior to testing.

   b. Vacuum Tests: The manhole, after proper preparation as noted above, shall be vacuum tested prior to backfilling, in accordance with ASTM C-1244. The test head shall be placed at the inside of the top of the cone section and the compression head inflated to 40 psi to effect a seal between the vacuum base and the manhole structure. Connect the vacuum pump to the outlet port with the valve open. A vacuum of 10 inches of mercury shall be drawn and the vacuum pump shut off. With the valves closed, the time shall be measured for the vacuum to drop to 9 inches. The manhole shall pass if the time is greater than 60 seconds for 48-inch diameter manholes. If the manhole fails the initial test, repairs shall be made with non-shrink grout while the vacuum is still being drawn. Retesting shall proceed until a satisfactory test is obtained. Vacuum testing equipment manufactured by P.A. Glazier, Inc. or approved equal.

D. Visual Straightness Test

1. Straightness of the completed sewer will be checked visually using reflected light or lanterns. Each segment between manholes must show at least 80 percent of the full pipe circle visible when looking from manhole to manhole.

E. Slope Measurement

1. Slope of the completed pipeline will be checked at each manhole to verify conformance with planned grade. Any variance in slope which in the Engineer's opinion is detrimental to the functional ability of the pipe will be cause for rejection. The Contractor is responsible for checking slope of pipe with a level at least every 100 feet as the job progresses and maintaining calibration of laser equipment. With each monthly pay request, the Contractor shall submit a copy of his survey notes showing actual elevation at each manhole and slope of each segment between manholes.

F. Mandrel Test

1. Each segment of completed pipeline will be checked by the Contractor pulling a mandrel of specified dimensions through the pipe. Vertical deflection shall not exceed five (5) percent of the undeflected diameter measured in accordance with ASTM Standards D3034 and F679, as applicable. The test shall be conducted at least 30 days after installation to allow for settlement of the pipeline.

2. Failure to satisfy any of the above tests will be reported promptly to the Engineer who, in consultation with the Owner and Contractor, may recommend additional tests or corrective action.

3.13 FIELD TESTING OF FORCE MAINS

A. Field hydrostatic testing shall be in accordance with Section 02667 of these specifications.

3.14 CLEAN-UP AND MAINTENANCE

A. All surplus materials, tools, temporary structures, excess dirt, rubbish and debris shall be removed by the Contractor and the site of construction shall be left in a clean and neat condition, satisfactory to the Engineer.

3.15 FINAL ACCEPTANCE

A. No pipeline installation or hydraulic structure shall be accepted until all known and visible leaks have been repaired, whether or not the leakage is within the maximum allowable limits. Location and repair of leaks shall be performed by the Contractor at no additional expense to the Owner.

B. The Contractor will certify that all required tests have been successfully completed before the work is accepted.

C. Any pipe which has its alignment, grade, or joints disturbed after installation shall be removed and re-installed.

3.16 CONTRACT CLOSEOUT

A. Provide in accordance with Section 01700.

** END OF SECTION **

SECTION 02936
GRASSING

1 GENERAL

1.1 SCOPE

A. This section covers preparation of subsoil, placing of topsoil, grassing construction, protection, maintenance, guarantee and replacement of grassing, and related items necessary for the establishment of a suitable stand of grass in areas disturbed by the construction.

1.2 SUBMITTALS

A. Certification of Grass Seed: Submit seed vendor's certified statement for each grass seed mixture required, stating botanical and common name, percentage by weight, and percentages of purity, germination, and weed seed for each grass seed species.

1.3 DELIVERY, STORAGE, AND PROTECTION

A. Deliver grass seed mixture in sealed containers. Seed in damaged packaging is not acceptable.

B. Deliver fertilizer in waterproof bags showing weight, chemical analysis, and name of manufacturer.

1.4 MAINTENANCE

A. Provide service and maintenance of seeded areas until final completion and closeout of the project.

B. Maintenance includes re-fertilization, weeding, mowing, watering, clean up, repair of all washouts, and gullies.

1.5 ACCEPTANCE

A. Establish a uniform stand of the specified grass with scattered bare spots, none of which is larger than one square foot, allowed up to a maximum of 3% of any grassed area.

B. It shall be the responsibility of the Contractor to repair any erosion damage to the grassed area until the date of final acceptance.

2 PRODUCTS

2.1 MATERIAL STANDARDS

A. Use materials that meet the requirements of the following Georgia Department of Transportation Standard Specifications:

1.	Wood Fiber Mulch	DOT Sec. 718.2
2.	Emulsified Asphalt	DOT Sec. 822
3.	Agricultural Lime	DOT Sec. 882.2.01
4.	Seed	DOT Sec. 890.2.01
5.	Sod	DOT Sec. 890.2.02
6.	Fertilizer	DOT Sec. 891.2.01
7.	Plant Topsoil	DOT Sec. 893.2.01
8.	Mulch	DOT Sec. 893.2.02
9.	Inoculants	DOT Sec. 893.2.04
10.	Tackifiers	DOT QPL 33

2.2 SEED MIXTURE

A. The seed mixture will be selected based on the geographic zone, the time of planting and the desired species of permanent grassing. This project is located in DOT Zone 2. Whenever seeds are specified by their common names, use the strains indicated by their botanical names. Use inoculants as required based on the type of seed. See Section 700 of Georgia DOT Standard Specifications for required seed mixture and planting times to achieve the permanent types of grass for each area of the project listed below.

B. Permanent grassing species to be Common Bermuda. A permanent stand of grass is required on all exposed slopes and areas adjacent to the approach road and turn-around. Areas below water level and areas around the edge of the river and reservoir do not require permanent grassing.

C. Temporary Grassing may be required if planting is needed at a time when the desired permanent grassing cannot be seeded according to Section 700 of Georgia DOT Standard Specifications. Any temporary grassing must be approved by Engineer.

D. When grassing right-of-way adjacent to existing lawns, use the same type of grass as is present on the lawn.

2.3 SOIL MATERIALS

A. Conserve and stockpile the best topsoil from the site for use on grassed areas. If necessary, to achieve the specified stand of grass, Contractor shall haul in topsoil from offsite.

2.4 ACCESSORIES

A. Mulching Material: Oat or wheat straw, free from weeds, foreign matter detrimental to plant life, and dry.

B. Fertilizer: Use a balanced commercial fertilizer mixed grade such as 10-10-10, 6-12-12, 5-10-15, or other analysis and apply at the rate per acre needed based on soil test results.

C. Water: Clean, fresh and free of substances or matter that could inhibit vigorous growth of grass.

D. Erosion Fabric: Where required to contain erosion, install a biodegradable matting

E. Lime: Use agricultural lime.

2.5 TESTS

A. Soil samples shall be taken and tested to determine grade and rate of application rates of fertilizer and lime.

3 EXECUTION

3.1 EQUIPMENT

A. Use grassing equipment able to produce the required results.

3.2 PREPARATION OF SOIL

A. Prepare the ground by plowing under any temporary grass areas and preparing the soil as follows:

1. Slopes 3:1 or Flatter:

a. Plow shoulders and embankment slopes to between 4 in and 6 in deep. In cut areas, plow to no less than 6 in deep. After plowing, thoroughly disk the area until pulverized to the plowed depth.

2. Slopes Steeper Than 3:1

a. Prepare the ground to develop an adequate seed bed using any of the following methods: Plow to whatever depth is practicable. Use a spiked chain. Walk with a cleated track dozer. Scarify.

B. Remove boulders, stumps, large roots, large clods, and other objects that interfere with grassing or mowing.

C. Spread topsoil stockpiled during grading evenly over cut and fill slopes after preparing the ground and just before seeding is scheduled.

1. Slopes on the dam shall have topsoil to a minimum depth of 4 inches.

2. If sufficient topsoil is available, it shall be spread over areas of the roadway that are to receive grass. Take care to notch out shoulders or leave below grade so that topsoil does not cause ponding against the edge of the travel surface.

3.3 FERTILIZER AND LIME

A. Apply fertilizer and lime at the recommended rate per acre in accordance with soil test results. Mix thoroughly in the top several inches of soil using harrows, tillers or other suitable equipment.

3.4 SEEDING

A. Inoculate Seed.

1. Inoculate each kind of leguminous seed separately with the appropriate commercial culture according to the manufacturer's instructions for the culture. When hydroseeding, double the inoculation rate. Protect inoculated seed from the sun and plant it the same day it is inoculated.

B. Sowing

1. Weather permitting, sow seed within 24 hours after preparing the seed bed and applying the fertilizer and lime.

2. Sow seed uniformly at the rates specified in the GA DOT Seeding Table for the specified type of permanent stand of grass.

3. Use approved mechanical seed drills, rotary hand seeders, hydraulic equipment, or other equipment to uniformly apply the seed. Do not distribute by hand.

4. To distribute the seeds evenly sow seed types separately, except for similarly sized and weighted seeds.

C. Rolling

1. Roll seeded areas before applying mulch, except on steep slopes where rollers cannot operate satisfactorily. On slopes inaccessible to compaction equipment, cover the seeds by dragging spiked chains over them or by using other methods.

2. Do not sow during windy weather, when the prepared surface is crusted, or when the ground is frozen, wet, or otherwise non-tillable.

D. Hydroseeding

1. Hydroseeding may be used on any grassing area. Under this method, spread the seed, fertilizer, and wood fiber mulch in the form of slurry. Seeds of all sizes may be mixed together. Inoculate the seeds at double the rate for seeds not being hydroseeded. Apply hydroseeding as follows:

a. Use wood fiber mulch as a metering agent and seed bed regardless of which mulching method is chosen.

b. Apply wood fiber mulch at approximately 1,500 lbs/acre.

c. Prepare the ground for hydroseeding as for conventional seeding.

d. Use specially designed equipment to mix and apply the slurry uniformly over the entire seeding area.

e. Agitate the slurry mixture during application.

f. Discharge slurry within one hour after being combined in the hydroseeder. Do not hydroseed when winds prevent an even application.

g. Closely follow the equipment manufacturer's directions.

h. Mulch the entire hydroseeded area.

3.5 MULCHING

A. Evenly apply straw or hay mulch between 3/4 in and 1-1/2 in deep, according to the texture and moisture content of the mulch material.

B. Mulch shall allow sunlight to penetrate and air to circulate as well as shade the ground, reduce erosion, and conserve soil moisture. If the type of mulch is not specified on the Plans or in the Proposal, use any of the following as specified.

1. Mulch with Binder. Apply mulch with binder regardless of whether using sowing or hydroseeding methods for seeding. Apply manually or with special blower equipment designed for the purpose. When using a blower, thoroughly loosen baled material before feeding it into the machine so that it is uniformly coated with binder and broken up. After distributing the mulch initially, redistribute it to bare or inadequately covered areas in clumps dense enough to prevent new grass from emerging. Do not apply mulch on windy days. Apply enough binder to the mulch to hold it in place. Immediately replace mulch that blows away. When using a power blower to distribute the mulch, spray the binder onto the mulch as the mulch is ejected from the machine. If distributing the mulch by hand, immediately apply the binder uniformly over the mulched areas. Use one of the following binders: Emulsified asphalt, SS-1h or SS-1 (DOT Section 822); or use a tackifier listed in the Laboratory Qualified Products Manual. Follow manufacturer's recommended rates.

2. Mixed-in-Place Mulch. Apply mixed-in-place mulch on flat areas or slopes 3:1 or less and treat as follows:

a. Immediately work the mulch into the soil with appropriate equipment to produce a loose soil and mulch mixture 3 in to 3.5 in (75 mm to 90 mm) deep.

b. After mixing mulch and soil and restoring areas to line and grade, seed as specified in this Section.

3. Walked-in-Mulch

a. Apply walked-in-mulch on slopes ranging in steepness from 5:1 to 2:1 and treat as follows:

b. Immediately walk it into the soil with a cleated track dozer. Make dozer passes vertically up and down the slope.

c. Where walked-in-mulch is used, do not roll or cover the seeds.

C. Cover seeded slopes where grade is 2:1 or greater with an approved erosion fabric installed according to manufacturer's recommendations.

3.6 MAINTENANCE

A. After the grass has grown to a height of 2 inches and before final acceptance, one additional application of nitrogen at the rate of 50 lbs/acre must be applied.

B. Apply nitrogen with mechanical hand spreaders or other approved spreaders capable of uniformly covering the grassed areas. Do not apply nitrogen on windy days or when the foliage is damp. Do not apply nitrogen between October 15 and March 15 except in Zone 4. Mow grass at regular intervals to maintain at a maximum height of 2-1/2 inches. Do not cut more than 1/3 of grass blade at any one mowing.

C. Water to prevent grass and soil from drying out.

D. Control growth of weeds. Apply herbicides in accordance with manufacturer's instructions. Remedy damage resulting from improper use of herbicides.

E. Immediately reseed areas that show bare spots.

F. Apply fertilizer at approximately 600 lbs/acre each spring after initial plant establishment until Final Acceptance.

G. The Engineer may require replanting of an area that shows unsatisfactory growth for any reason at any time. Except as otherwise specified or permitted, prepare replanting areas according to the Specifications as if they were the initial planting areas. Grassed areas will be considered acceptable when a viable stand of grass covers at least 98% of the total area with no bare spots exceeding one square foot and the ground surface is fully stabilized against erosion.

** END OF SECTION **

SECTION 03200
CONCRETE REINFORCEMENT

1 GENERAL

1.1 SCOPE OF WORK

A. Furnish all labor, materials, equipment and incidentals required and install all concrete reinforcement complete as shown on the Drawings and as specified herein.

1.2 RELATED WORK

A. Cast-in-place Concrete is included in Section 03300.

1.3 SUBMITTALS

A. Submit to the Engineer, in accordance with Section 01300, shop drawings and product data showing materials of construction and details of installation for:

1. Reinforcing steel. Placement drawings shall conform to the recommendations of ACI 315. All reinforcement in a concrete placement shall be included on a single placement drawing or cross referenced to the pertinent main placement drawing. The main drawing shall include the additional reinforcement (around openings, at corners, etc) shown on the standard detail sheets. Bars to have special coatings and/or to be of special steel or special yield strength are to be clearly identified. For all cast-in-place concrete tanks, retaining walls, building stem walls, wall sections shall be included in the drawings.
2. Bar bending details. The bars shall be referenced to the same identification marks shown on the placement drawings.
3. Schedule of all placements to contain synthetic reinforcing fibers. The amount of fibers per cubic yard to be used for each of the placements shall be noted on the schedule. The name of the manufacturer of the fibers and the product data shall be included with the submittal.

B. Submit Test Reports, in accordance with Section 01300, of each of the following items.

1. Certified copy of mill test on each steel proposed for use showing the physical properties of the steel and the chemical analysis.
2. Welder's certification. The certification shall be in accordance with AWS D1.4 when welding of reinforcement required.

1.4 REFERENCE STANDARDS

A. American Society for Testing and Materials (ASTM)

1. ASTM A82 - Standard Specification for Steel Wire, Plain, for Concrete Reinforcement.
2. ASTM A184 - Standard Specification for Fabricated Deformed Steel Bar Mats for Concrete Reinforcement.
3. ASTM A185 - Standard Specification for Steel Welded Wire Fabric, Plain, for Concrete Reinforcement
4. ASTM A496 - Standard Specification for Steel Wire, Deformed, for Concrete Reinforcement
5. ASTM A497 - Standard Specification for Steel Welded Wire Fabric, Deformed, for Concrete Reinforcement
6. ASTM A615 - Standard Specification for Deformed and Plain Billet-Steel Bars for Concrete Reinforcement
7. ASTM A616 - Standard Specification for Rail-Steel Deformed and Plain Bars for Concrete Reinforcement

8. ASTM A617 - Standard Specification for Axle-Steel Deformed and Plain Bars for Concrete Reinforcement
9. ASTM A706 - Standard Specification for Low-Alloy Steel Deformed and Plain Bars for Concrete Reinforcement.
10. ASTM A767 - Standard Specification for Zinc-Coated (Galvanized) Steel Bars for Concrete Reinforcement
11. ASTM A775 - Standard Specification for Epoxy-Coated Reinforcing Steel Bars.
12. ASTM A884 - Standard Specification for Epoxy-Coated Steel Wire and Welded Wire Fabric for Reinforcement.
13. ASTM A934 - Standard Specification for Epoxy-Coated Prefabricated Steel Reinforcing Bars.

B. American Concrete Institute (ACI)

1. ACI 301 - Standard Specification for Structural Concrete
2. ACI 315 - Details and Detailing of Concrete Reinforcement.
3. ACI 318 - Building Code Requirements for Structural Concrete
4. ACI SP-66 - ACI Detailing Manual

C. Concrete Reinforcing Steel Institute (CRSI)

1. Manual of Standard Practice

D. American Welding Society (AWS)

1. AWS D1.4 - Structural Welding Code Reinforcing Steel

E. Where reference is made to one of the above standards, the revision in effect at the time of bid opening shall apply.

1.5 QUALITY ASSURANCE

A. Provide services of a manufacturer's representative, with at least 2 years experience in the use of the reinforcing fibers for a preconstruction meeting and assistance during the first placement of the material.

1.6 DELIVERY, HANDLING AND STORAGE

A. Reinforcing steel shall be substantially free from mill scale, rust, dirt, grease, or other foreign matter.

B. Reinforcing steel shall be shipped and stored with bars of the same size and shape fastened in bundles with durable tags, marked in a legible manner with waterproof markings showing the same "mark" designations as those shown on the submitted Placing Drawings.

C. Reinforcing steel shall be stored off the ground and kept free from dirt, oil, or other injurious contaminants.

2 PRODUCTS

2.1 MATERIALS

A. Materials shall be new, of domestic manufacture and shall comply with the following material specifications.

B. Deformed Concrete Reinforcing Bars: ASTM A615, Grade 60 deformed bars.

C. Concrete Reinforcing Bars required on the Drawings to be Welded: ASTM A706.

D. Welded Steel Wire Fabric: ASTM A185. Provide in flat sheets.

E. Welded Deformed Steel Wire Fabric: ASTM A497.

F. Welded Plain Bar Mats: ASTM A704 and ASTM A615 Grade 60 plain bars.

G. Fabricated Deformed Steel Bar Mats: ASTM A184 and ASTM A615 Grade 60 deformed bars.

H. The following alternate materials are allowed:

1. ASTM A615 Grade 60 may be used for ASTM A706 provided the following requirements are satisfied:

a. The actual yield strength of the reinforcing steel based on mill tests shall not exceed the specified yield strength by more than 18,000 psi. Retests shall not exceed this value by more than an additional 3000 psi.

b. The ratio of the actual ultimate tensile strength to the actual tensile yield strength of the reinforcement shall not be less than 1.25.

c. The carbon equivalency (CE) of bars shall be 0.55 or less.

I. Reinforcing Steel Accessories

1. Plastic Protected Bar Supports: CRSI Bar Support Specifications, Class 1 - Maximum Protection.

2. Stainless Steel Protected Bar Supports: CRSI Bar Support Specifications, Class 2 - Moderate Protection.

3. Precast Concrete Block Bar Supports: CRSI Bar Support Specifications, Precast Blocks. Blocks shall have equal or greater strength than the surrounding concrete.

4. Steel Protected Bar Supports: #4 Steel Chairs with plastic or rubber tips.

J. Tie Wire

1. Tie Wires for Reinforcement shall be 16-gauge or heavier, black annealed wire or stranded wire.

K. Mechanical reinforcing steel butt splices shall be positive connecting taper threaded type employing a hexagonal coupler such as Lenton rebar splices as manufactured by Erico Products Inc., Solon, OH or equal. They shall meet all ACI 318 Building Code requirements. Bar ends must be taper threaded with coupler manufacturer's bar threader to ensure proper taper and thread engagement. Bar couplers shall be torqued to manufacturer's recommended value.

1. Unless otherwise noted on the Drawings, mechanical tension splices shall be designed to produce a splice strength in tension or compression of not less than 125 percent of the ASTM specified minimum yield strength of the rebar.

2. Compression type mechanical splices shall provide concentric bearing from one bar to the other bar and shall be capable of developing the ultimate strength of the rebar in compression.

L. Fiber Reinforcement

1. Synthetic reinforcing fiber for concrete shall be 100 percent polypropylene collated, fibrillated fibers as manufactured by Propex Concrete Systems Chattanooga, TN - Propex or equal. Fiber length and quantity for the concrete mix shall be in strict compliance with the manufacturer's recommendations as approved by the Engineer.

2.2 FABRICATION

A. Fabrication of reinforcement shall be in compliance with the CRSI Manual of Standard Practice.

B. Bars shall be cold bent. Bars shall not be straightened or rebent.

C. Bars shall be bent around a revolving collar having a diameter of not less than that recommended by the ACI 318.

D. Bar ends that are to be butt spliced, placed through limited diameter holes in metal, or threaded, shall have the applicable end(s) saw-cut. Such ends shall terminate in flat surfaces within 1-1/2 degrees of a right angle to the axis of the bar.

3 EXECUTION

3.1 INSTALLATION

A. Surface condition, bending, spacing and tolerances of placement of reinforcement shall comply with the CRSI Manual of Standard Practice. The Contractor shall be solely responsible for providing an adequate number of bars and maintaining the spacing and clearances shown on the Drawings.

B. Except as otherwise indicated on the Drawings, the minimum concrete cover of reinforcement shall be as follows:

1. Concrete cast against and permanently exposed to earth: 3-in
2. Concrete exposed to soil, water, sewage, sludge and/or weather: 2-in (Including bottom cover of slabs over water or sewage)
3. Concrete not exposed to soil, water, sewage, sludge and/or weather:
   a. Slabs (top and bottom cover), walls, joists, shells and folded plate members – 3/4-in
   b. Beams and columns (principal reinforcement, ties, spirals and stirrups) - 1-1/2-in

C. Reinforcement which will be exposed for a considerable length of time after being placed shall be coated with a heavy coat of neat cement slurry.

D. No reinforcing steel bars shall be welded either during fabrication or erection unless specifically shown on the Drawings or specified herein, or unless prior written approval has been obtained from the Engineer. All bars that have been welded, including tack welds, without such approval shall be immediately removed from the work. When welding of reinforcement is approved or called for, it shall comply with AWS D1.4.

E. Reinforcing steel interfering with the location of other reinforcing steel, conduits or embedded items, may be moved within the specified tolerances or one bar diameter, whichever is greater. Greater displacement of bars to avoid interference shall only be made with the approval of the Engineer. Do not cut reinforcement to install inserts, conduits, mechanical openings or other items without the prior approval of the Engineer.

F. Securely support and tie reinforcing steel to prevent movement during concrete placement. Secure dowels in place before placing concrete.

G. Reinforcing steel bars shall not be field bent except where shown on the Drawings or specifically authorized in writing by the Engineer. If authorized, bars shall be cold-bent around the standard diameter spool specified in the CRSI. Do not heat bars. Closely inspect the reinforcing steel for breaks. If the reinforcing steel is damaged, replace, Cadweld or otherwise repair as directed by the Engineer. Do not bend reinforcement after it is embedded in concrete unless specifically shown otherwise on the Drawings.

3.2 REINFORCEMENT AROUND OPENINGS

A. Unless specific additional reinforcement around openings is shown on the Drawings, provide additional reinforcing steel on each side of the opening equivalent to one half of the cross-sectional area of the reinforcing steel interrupted by an opening. The bars shall have sufficient length to develop bond at each end beyond the opening or penetration.

3.3 SPLICING OF REINFORCEMENT

A. Splices designated as compression splices on the Drawings, unless otherwise noted, shall be 30 bar diameters, but not less than 12-in. The lap splice length for column vertical bars shall be based on the bar size in the column above.

B. Tension lap splices shall be provided at all laps in compliance with ACI 318. Splices in adjacent bars shall be staggered. Class A splices may be used when 50 percent or less of the bars are spliced within the required lap length. Class B splices shall be used at all other locations.

C. Splicing of reinforcing steel in concrete elements noted to be "tension members" on the Drawings shall be avoided whenever possible. However, if required for constructability, splices in the reinforcement subject to direct tension shall be welded to develop, in tension, at least 125 percent of the specified yield strength of the bar. Splices in adjacent bars shall be offset the distance of a Class B splice.

D. Install wire fabric in as long lengths as practicable. Wire fabric from rolls shall be rolled flat and firmly held in place. Splices in welded wire fabric shall be lapped in accordance with the requirements of ACI-318 but not less than 12-in. The spliced fabrics shall be tied together with wire ties spaced not more than 24-in on center and laced with wire of the same diameter as the welded wire fabric. Do not position laps midway between supporting beams, or directly over beams of continuous structures. Offset splices in adjacent widths to prevent continuous splices.

E. Mechanical reinforcing steel splicers shall be used only where shown on the Drawings. Splices in adjacent bars shall be offset by at least 30 bar diameters. Mechanical reinforcing splices are only to be used for special splice and dowel conditions approved by the Engineer.

3.4 ACCESSORIES

A. Determine, provide and install accessories such as chairs, chair bars and the like in sufficient quantities and strength to adequately support the reinforcement and prevent its displacement during the erection of the reinforcement and the placement of concrete.

B. Use precast concrete blocks where the reinforcing steel is to be supported over soil.

C. Stainless steel bar supports or steel chairs with stainless steel tips shall be used where the chairs are set on forms for a concrete surface that will be exposed to weather, high humidity, or liquid (including bottom of slabs over liquid containing areas). Use of galvanized or plastic tipped metal chairs is permissible in all other locations unless otherwise noted on the Drawings or specified herein.

D. Alternate methods of supporting top steel in slabs, such as steel channels supported on the bottom steel or vertical reinforcing steel fastened to the bottom and top mats, may be used if approved by the Engineer.

3.5 INSPECTION

A. In no case shall any reinforcing steel be covered with concrete until the installation of the reinforcement, including the size, spacing and position of the reinforcement has been observed by the Engineer and the Engineer's release to proceed with the concreting has been obtained. The Engineer shall be given ample prior notice of the readiness of placed reinforcement for observation. The forms shall be kept open until the Engineer has finished his/her observations of the reinforcing steel.

** END OF SECTION **

SECTION 03250
CONCRETE JOINS AND JOINT ACCESSORIES

1 GENERAL

1.1 SCOPE OF WORK

A. Furnish all labor, materials, equipment and incidentals required and install accessories for concrete joints as shown on the Drawings and as specified herein.

1.2 RELATED WORK

A. Concrete Reinforcement is included in Section 03200.

B. Cast-In-Place Concrete is included in Section 03300.

C. Concrete Finishes are included in Section 03350.

D. Grout is included in Section 03600.

1.3 SUBMITTALS

A. Submit to the Engineer, in accordance with Section 01300, shop drawings and product data. Submittals shall include at least the following:

1. Standard Waterstops: Product data including catalogue cut, technical data, storage requirements, splicing methods and conformity to ASTM standards.
2. Special Waterstops: Product data including catalogue cut, technical data, location of use, storage requirements, splicing methods, installation instructions and conformity to ASTM standards.
3. Premolded joint fillers: Product data including catalogue cut, technical data, storage requirements, installation requirements, location of use and conformity to ASTM standards.
4. Bond breaker: Product data including catalogue cut, technical data, storage requirements, installation requirements, location of use and conformity to ASTM standards.
5. Expansion joint dowels: Product data on the complete assembly including dowels, coatings, lubricants, spacers, sleeves, expansion caps, installation requirements and conformity to ASTM standards.
6. Compressible joint filler: Product data including catalogue cut, technical data, storage requirements, installation requirements, location of use and conformity to ASTM standards.
7. Bonding agents: Product data including catalogue cut, technical data, storage requirements, product life, application requirements and conformity to ASTM standards.

B. Certifications

1. Certification that all materials used within the joint system is compatible with each other.
2. Certifications that materials used in the construction of joints are suitable for use in contact with potable water 30 days after installation.

1.4 REFERENCE STANDARDS

A. American Society for Testing and Materials (ASTM)

1. ASTM A675 - Standard Specification for Steel Bars, Carbon, Hot-Wrought, Special Quality, Mechanical Properties.
2. ASTM C881 - Standard Specification for Epoxy-Resin-Base Bonding Systems for Concrete.

3. ASTM C1059 - Standard Specification for Latex Agents for Bonding Fresh to Hardened Concrete.
4. ASTM D1751 - Standard Specification for Preformed Expansion Joint Fillers for Concrete Paving and Structural Construction. (Nonextruding and Resilient Bituminous Types).
5. ASTM D1752 - Standard Specification for Preformed Sponge Rubber and Cork Expansion Joint Fillers for Concrete Paving and Structural Construction.

B. U.S. Army Corps of Engineers (CRD).
1. CRD C572 - Specification for Polyvinylchloride Waterstops.

C. Federal Specifications
1. FS SS-S-210A - Sealing Compound for Expansion Joints.

D. Where reference is made to one of the above standards, the revision in effect at the time of bid opening shall apply.

2 PRODUCTS

2.1 GENERAL

A. The use of manufacturer's name and model or catalog number is for the purpose of establishing the standard of quality and general configuration desired.

B. All materials used together in a given joint (bond breakers, backer rods, joint fillers, sealants, etc) shall be compatible with one another. Coordinate selection of suppliers and products to ensure compatibility. Under no circumstances shall asphaltic bond breakers or joint fillers be used in joints receiving sealant.

C. All chemical sealant type waterstops shall be products specifically manufactured for the purpose for which they will be used and the products shall have been successfully used on similar structures for more than five years.

2.2 MATERIALS

A. Standard Waterstops
1. PVC Waterstops - The waterstop shall be made by extruding elastomeric plastic compound with virgin polyvinylchloride as the basic resins. The compound shall contain no reprocessed materials. Minimum tensile strength of waterstop shall be 1750 psi. The waterstop shall conform to CRD-C572. The waterstop shall be Greenstreak Group, Inc. model No. 679 or approved equal for construction joints. The waterstop shall be Greenstreak Group Inc. model No.732 or approved equal for control joints and Greenstreak Group Inc. Model No. 738 for expansion joints. Provide grommets or pre-punched holes spaced at 12 inches on center along length of waterstop.
2. Factory Fabrications: Provide factory made waterstop fabrications for all changes of direction, transitions, and intersections, leaving only straight butt joints of sufficient length for splicing in the field.

B. Special Waterstops
1. Base Seal PVC Waterstop - The waterstop shall be made by extruding elastomeric plastic compound with virgin polyvinylchloride as the basic resins. The compound shall contain no reprocessed materials. Minimum tensile strength of waterstop shall be 1750 psi. The waterstop shall conform to CRD-C572. Waterstops shall be style 925 for expansion joints, style 928 for control joints, and style 927 for construction joints by Greenstreak Plastic Products, St. Louis, MO or equal.
2. Preformed adhesive waterstops - The waterstop shall be a rope type preformed plastic waterstop meeting the requirements of Federal Specification SS-S-210A. The rope shall have a cross-section of approximately one square inch unless otherwise specified or shown on the Drawings. The waterstop shall be Synko-Flex waterstop as

manufactured by Synko-Flex Products of Houston, TX, Lockstop by Greenstreak Group Inc., or equal. Primer for the material shall be as recommended by the waterstop manufacturer.

C. Premolded Joint Filler

1. Premolded joint filler - Structures. Self-expanding cork, premolded joint filler shall conform to ASTM D1752, Type III. The thickness shall be 3/4-in unless shown otherwise on the Drawings.
2. Premolded joint filler - sidewalk and roadway concrete pavements or where fiber joint filler is specifically noted on the Drawings. The joint filler shall be asphalt-impregnated fiber board conforming to ASTM D1751. Thickness shall be 3/4-in unless otherwise shown on the Drawings.

D. Bond Breaker

1. Bond breaker tape shall be an adhesive-backed glazed butyl or polyethylene tape which will satisfactorily adhere to the premolded joint filler or concrete surface as required. The tape shall be the same width as the joint.
2. Except where tape is specifically called for on the drawings, bond breaker for concrete shall be either bond breaker tape or a nonstaining type bond prevention coating such as Williams Tilt-up Compound by Williams Distributors Inc.; Silcoseal 77, by SCA Construction Supply Division, Superior Concrete Accessories or equal.

E. Expansion Joint Dowels

1. Dowels shall be smooth steel conforming to ASTM A675, Grade 70. Dowels must be straight and clean, free of loose flaky rust and loose scale. Dowels may be sheared to length provided deformation from true shape caused by shearing does not exceed 0.04-in on the diameter of the dowel and extends no more than 0.04-in from the end. Bars shall be coated with a bond breaker on the expansion end of the dowel. Expansion caps shall be provided on the expansion end. Caps shall allow for at least 1-1/2-in of expansion.
2. Dowel Bar Sleeves: Provide Greenstreak two component Speed Dowel System, to accept 1” diameter x 12” long slip dowels. The Greenstreak Group, Inc. Speed Dowel System is comprised of a reusable base and a plastic sleeve. Both pieces shall be manufactured from polypropylene plastic.

F. Bonding Agent

1. Epoxy bonding agent shall be a two-component, solvent-free, moisture insensitive, epoxy resin material conforming to ASTM C881, Type II. The bonding agent shall be Sikadur 32 Hi-Mod by Sika Corporation of Lyndhurst, N.J.; Concresive Liquid (LPL) by Master Builders of Cleveland, OH or equal. Acrylic may be used if approved by the Engineer.

G. Compressible Joint Filler

1. The joint filler shall be a non-extruded watertight strip material use to fill expansion joints between structures. The material shall be capable of being compressed at least 40 percent for 70 hours at 68 degrees F and subsequently recovering at least 20 percent of its original thickness in the first 1/2 hour after unloading. Compressible Joint filler shall be Evasote 380 E.S.P, by E-Poxy Industries, Inc., Ravena, NY , Sikaflex 1a by Sika or equal.

3 EXECUTION

3.1 INSTALLATION

A. Standard Waterstops

1. Install waterstops for all joints where indicated on the Drawings. Waterstops shall be continuous around all corners and intersections so that a continuous seal is provided.

Provide factory made waterstop fabrications for all changes in direction, intersections and transitions leaving only straight butt joints splices for the field.

2. Horizontal waterstops in slabs shall be clamped in position by the bulkhead (unless previously set in concrete).
3. Waterstops shall be installed so that half of the width will be embedded on each side of the joint. Care shall be exercised to ensure that the waterstop is completely embedded in void-free concrete.
4. Waterstops shall be terminated 3-in below the exposed top of walls. Expansion joint waterstop center bulbs shall be plugged with foam rubber, 1-in deep, at point of termination.

B. Special Waterstops

1. Install special waterstops at joints where specifically noted on the Drawings. Waterstops shall be continuous around all corners and intersections so that a continuous seal is provided. Provide factory made waterstop fabrications for all changes in direction, intersections and transitions leaving only straight butt joints splices for the field.
2. Each piece of the waterstop shall be of maximum practicable length to provide a minimum number of connections or splices. Connections and splices shall conform to the manufacturer's recommendations and as specified herein.
3. Waterstops shall be terminated 3-in below the exposed top of walls.

C. Construction Joints

1. Make construction joints only at locations shown on the Drawings or as approved by the Engineer. Any additional or relocation of construction joints proposed by the Contractor, must be submitted to the Engineer for written approval.
2. Additional or relocated joints should be located where they least impair strength of the member. In general, locate joints within the middle third of spans of slabs, beams and girders. However, if a beam intersects a girder at the joint, offset the joint a distance equal to twice the width of the member being connected. Locate joints in walls and columns at the underside of floors, slabs, beams or girders and at tops of footings or floor slabs. Do not locate joints between beams, girders, column capitals, or drop panels and the slabs above them. Do not locate joints between brackets or haunches and walls or columns supporting them.
3. All joints shall be perpendicular to main reinforcement. Continue reinforcing steel through the joint as indicated on the Drawings. When joints in beams are allowed, provide a shear key and inclined dowels as approved by the Engineer.
4. Provide sealant grooves for joint sealant where indicated on the Drawings.
5. At all construction joints and at concrete joints designated on the Drawings to be "roughened", uniformly roughen the surface of the concrete to a full amplitude (distance between high and low points or side to side) of approximately 1/4-in to expose a fresh face. Thoroughly clean joint surfaces of loose or weakened materials by water-blasting or sandblasting and prepare for bonding.
6. Provide waterstops in all wall and slab construction joints in liquid containment structures and at other locations shown on the Drawings.
7. Keyways shall not be used in construction joints unless specifically shown on the Drawings or approved by the Engineer.

D. Expansion Joints

1. Do not extend through expansion joints, reinforcement or other embedded metal items that are continuously bonded to concrete on each side of joint.
2. Position premolded joint filler material accurately. Secure the joint filler against displacement during concrete placement and compaction. Place joint filler over the

face of the joint, allowing for sealant grooves as detailed on the Drawings. Tape all joint filler splices to prevent intrusion of mortar. Seal expansion joints as shown on the Drawings.

3. Expansion joints shall be 3/4-in in width unless otherwise noted on the Drawings.
4. Where indicated on Drawings, install smooth dowels at right angles to expansion joints. Align dowels accurately with finished surface. Rigidly hold in place and support during concrete placement. Unless otherwise shown on the Drawings, apply oil or grease to one end of all dowels through expansion joints. Provide plastic expansion caps on the lubricated ends of expansion dowels.
5. Provide center bulb type waterstops in all wall and slab expansion joints in liquid containment structures and at other locations shown on the Drawings.

E. Control Joints

1. Provide sealant grooves, sealants and waterstops at control joints in slabs on grade or walls as detailed. Provide waterstops at all wall and slab control joints in water containment structures and at other locations shown on the Drawings.
2. Control joints may be sawed if specifically approved by the Engineer. If control joint grooves are sawed, properly time the saw cutting with the time of the concrete set. Start cutting as soon as concrete has hardened sufficiently to prevent aggregates from being dislodged by the saw. Complete cutting before shrinkage stresses have developed sufficiently to induce cracking. No reinforcing shall be cut during saw cutting.
3. Extend every other bar of reinforcing steel through control joints or as indicated on the Drawings. Where specifically noted on the Drawings, coat the concrete surface with a bond breaker prior to placing new concrete against it. Avoid coating reinforcement or waterstops with bond breaker at these locations.

** END OF SECTION **

SECTION 03300
CAST-IN-PLACE CONCRETE

1 GENERAL

1.1 SCOPE OF WORK

A. Furnish all labor and materials required and install cast-in-place concrete complete as shown on the Drawings and as specified herein.

1.2 RELATED WORK

A. Concrete Reinforcement is included in Section 03200.

B. Concrete Joints and Joint Accessories are included in Section 03250.

C. Concrete Finishes are included in Section 03350.

D. Grout is included in Section 03600.

E. Modifications and Repair to Concrete are included in section 03740.

1.3 SUBMITTALS

A. The contractor shall submit shop drawings and product data to the Engineer in accordance with the requirements of Section 01300, Submittals.

B. At a minimum, the submittals shall contain, but not be limited to, the following information to establish compliance with these specifications.

1. Sources of cement, pozzolan and aggregates.
2. Material Safety Data Sheets (MSDS) for all concrete components and admixtures.
3. Air-entraining admixture. Product data including catalogue cut, technical data, storage requirements, product life, recommended dosage, temperature considerations and conformity to ASTM standards.
4. Water-reducing admixture. Product data including catalogue cut, technical data, storage requirements, product life, recommended dosage, temperature considerations and conformity to ASTM standards.
5. High-range water-reducing admixture (plasticizer). Product data including catalogue cut, technical data, storage requirements, product life, recommended dosage, temperature considerations, retarding effect, slump range and conformity to ASTM standards. Identify proposed locations of use.
6. Concrete mix for each formulation of concrete proposed for use including constituent quantities per cubic yard, water-cementitious materials ratio, concrete slump, type and manufacturer of cement. Provide either a. or b. below for each mix proposed.
   a. Standard deviation data for each proposed concrete mix based on statistical records.
   b. The curve of water-cementitious materials ratio versus concrete cylinder strength for each formulation of concrete proposed based on laboratory tests. The cylinder strength shall be the average of the 28-day cylinder strength test results for each mix. Provide results of 7 and 14 day tests if available.
7. Sheet curing material. Product data including catalogue cut, technical data and conformity to ASTM standard.
8. Liquid curing compound. Product data including catalogue cut, technical data, storage requirements, product life, application rate and conformity to ASTM standards. Identify proposed locations of use.

C. Samples

1. Fine and coarse aggregates if requested by the Engineer.

D. Test Reports

1. Fine aggregates - sieve analysis, physical properties, and deleterious substance.
2. Coarse aggregates - sieve analysis, physical properties, and deleterious substances.
3. Cements - chemical analysis and physical properties for each type.
4. Pozzolans - chemical analysis and physical properties.
5. Proposed concrete mixes - compressive strength, slump and air content.

E. Certifications

1. Certify admixtures used in the same concrete mix are compatible with each other and the aggregates.
2. Certify admixtures are suitable for use in contact with potable water after 30 days of concrete curing.
3. Certify curing compound is suitable for use in contact with potable water after 30 days (non-toxic and free of taste or odor).

1.4 REFERENCE STANDARDS

A. American Society for Testing and Materials (ASTM)

1. ASTM C31 - Standard Practice for Making and Curing Concrete Test Specimens in the Field.
2. ASTM C33 - Standard Specification for Concrete Aggregates.
3. ASTM C39 - Standard Test Method for Compressive Strength of Cylindrical Concrete Specimens.
4. ASTM C42 - Standard Test Method for Obtaining and Testing Drilled Cores and Sawed Beams of Concrete.
5. ASTM C94 - Standard Specification for Ready-Mixed Concrete.
6. ASTM C143 - Standard Test Method for Slump of Hydraulic Cement Concrete
7. ASTM C150 - Standard Specification for Portland Cement
8. ASTM C171 - Standard Specification for Sheet Materials for Curing Concrete
9. ASTM C173 - Standard Test Method for Air Content of Freshly Mixed Concrete by the Volumetric Method.
10. ASTM C231 - Standard Test Method for Air Content of Freshly Mixed Concrete by the Pressure Method.
11. ASTM C260 - Standard Specification for Air-Entraining Admixtures for Concrete.
12. ASTM C309 - Standard Specification for Liquid Membrane-Forming Compounds for Curing Concrete.
13. ASTM C494 - Standard Specification for Chemical Admixtures for Concrete.
14. ASTM C618 - Standard Specification for Coal Fly Ash and Raw or Calcined Natural Pozzolan for Use as a Mineral Admixture in Concrete.
15. ASTM C1017 - Standard Specification for Chemical Admixtures for use in Producing Flowing Concrete.

B. American Concrete Institute (ACI)

1. ACI 304 - Guide for Measuring, Mixing, Transporting and Placing Concrete.
2. ACI 305 - Hot Weather Concreting.
3. ACI 306.1 - Standard Specification for Cold Weather Concreting.
4. ACI 318 - Building Code Requirements for Structural Concrete.
5. ACI 350 - Environmental Engineering Concrete Structures.

6. Where reference is made to one of the above standards, the revision in effect at the time of bid opening shall apply.

1.5 QUALITY ASSURANCE

A. Reinforced concrete shall comply with ACI 318, the recommendations of ACI 350R and other stated requirements, codes and standards. The most stringent requirement of the codes, standards and this Section shall apply when conflicts exist.

B. Only one source of cement and aggregates shall be used on any one structure. Concrete shall be uniform in color and appearance.

C. Well in advance of placing concrete, discuss with the Engineer the sources of individual materials and batched concrete proposed for use. Discuss placement methods, waterstops and curing. Propose methods of hot and cold weather concreting as required. Prior to the placement of any concrete containing a high-range water-reducing admixture (plasticizer), the Contractor, accompanied by the plasticizer manufacturer, shall discuss the properties and techniques of batching and placing plasticized concrete.

D. If, during the progress of the work, it is impossible to secure concrete of the required workability and strength with the materials being furnished, the Engineer may order such changes in proportions or materials, or both, as may be necessary to secure the desired properties. All changes so ordered shall be made at the Contractor's expense.

E. If, during the progress of the work, the materials from the sources originally accepted change in characteristics, the Contractor shall, at his/her expense, make new acceptance tests of aggregates and establish new design mixes.

F. Testing of the following materials shall be furnished by Contractor to verify conformity with this Specification Section and the stated ASTM Standards.

1. Fine aggregates for conformity with ASTM C33 - sieve analysis, physical properties, and deleterious substances.

2. Coarse aggregates for conformity with ASTM C33 - sieve analysis, physical properties, and deleterious substances.

3. Cements for conformity with ASTM C150 - chemical analysis and physical properties.

4. Pozzolans for conformity with ASTM C618 - chemical analysis and physical properties.

5. Proposed concrete mix designs - compressive strength, slump and air content.

G. Field testing and inspection services will be provided by the Owner. The cost of such work, except as specifically stated otherwise, shall be paid by the Owner. Testing of the following items shall be by the Owner to verify conformity with this Specification Section.

1. Concrete placements - compressive strength (cylinders), compressive strength (cores), slump, and air content.

2. Other materials or products that may come under question.

H. All materials incorporated in the work shall conform to accepted samples.

1.6 DELIVERY, STORAGE AND HANDLING

A. Cement: Store in weather-tight buildings, bins or silos to provide protection from dampness and contamination and to minimize warehouse set.

B. Aggregate: Arrange and use stockpiles to avoid excessive segregation or contamination with other materials or with other sizes of like aggregates. Build stockpiles in successive horizontal layers not exceeding 3-ft in thickness. Complete each layer before the next is started. Do not use frozen or partially frozen aggregate.

C. Sand: Arrange and use stockpiles to avoid contamination. Allow sand to drain to uniform moisture content before using. Do not use frozen or partially frozen aggregates.

D. Admixtures: Store in closed containers to avoid contamination, evaporation or damage. Provide suitable agitating equipment to assure uniform dispersion of ingredients in

admixture solutions which tend to separate. Protect liquid admixtures from freezing and other temperature changes which could adversely affect their characteristics.

E. Pozzolan: Store in weather-tight buildings, bins or silos to provide protection from dampness and contamination.

F. Sheet Curing Materials: Store in weather-tight buildings or off the ground and under cover.

G. Liquid Curing Compounds: Store in closed containers.

2 PRODUCTS

2.1 GENERAL

A. The use of manufacturer's name and model or catalog number is for the purpose of establishing the standard of quality and general configuration desired.

2.2 CEMENT

A. U.S. made portland cement complying with ASTM C150.

B. Air entraining cements shall not be used.

C. Cement brand shall be subject to approval by the Engineer and one brand shall be used throughout the Work.

2.3 MATERIALS

A. Materials shall comply with this Section and any applicable State or local requirements.

B. Cement: The following cement type(s) shall be used:

1. All Classes - Type I/II or Type II

C. Fine Aggregate: Washed inert natural sand conforming to the requirements of ASTM C33.

D. Coarse Aggregate: Well-graded crushed stone or washed gravel conforming to the requirements of ASTM C33. Grading requirements shall be as listed in ASTM C33 Table 2 for the specified coarse aggregate size number. Limits of Deleterious Substances and Physical Property Requirements shall be as listed in ASTM C33 Table 3 for severe weathering regions. Size numbers for the concrete mixes shall be as shown in Table 1 herein.

E. Water: Potable water free from injurious amounts of oils, acids, alkalis, salts, organic matter, or other deleterious substances.

F. Admixtures: Admixtures shall be free of chlorides and alkalis (except for those attributable to water). When it is required to use more than one admixture in a concrete mix, the admixtures shall be from the same manufacturer. Admixtures shall be compatible with the concrete mix including other admixtures and shall be suitable for use in contact with potable water after 30 days of concrete curing.

1. Air-Entraining Admixture: The admixture shall comply with ASTM C260. Proportioning and mixing shall be in accordance with manufacturer's recommendations.

2. Water-Reducing Agent: The admixture shall comply with ASTM C494, Type A. Proportioning and mixing shall be in accordance with manufacturer's recommendations.

3. High-Range Water-Reducer (Plasticizer): The admixture shall comply with ASTM C494, Type F and shall result in non-segregating plasticized concrete with little bleeding and with the physical properties of low water/cement ratio concrete. The treated concrete shall be capable of maintaining its plastic state in excess of 2 hours. Proportioning and mixing shall be in accordance with manufacturer's recommendations. Where walls are 14” thick or less and the wall height exceeds 12 ft a mix including a plasticizer must be used.

4. Admixtures causing retarded or accelerated setting of concrete shall not be used without written approval from the Engineer. When allowed, the admixtures shall be retarding or accelerating water reducing or high range water reducing admixtures.

G. Pozzolan (Fly Ash): Pozzolan shall be Class C or Class F fly ash complying with ASTM C618 except the Loss on Ignition (LOI) shall be limited to 3 percent maximum.

H. Sheet Curing Materials. Waterproof paper, polyethylene film or white burlap-polyethylene sheeting all complying with ASTM C171.

I. Liquid Curing Compound. Liquid membrane-forming curing compound shall comply with the requirements of ASTM C309, Type 1-D (clear or translucent with fugitive dye) and shall contain no wax, paraffin, or oil. Curing compound shall be approved for use in contact with potable water after 30 days (non-toxic and free of taste or odor). Curing compound shall comply with Federal, State and local VOC limits.

2.4 MIXES

A. Development of mix designs and testing shall be by an independent testing laboratory acceptable to the Engineer engaged by and at the expense of the Contractor.

B. Select proportions of ingredients to meet the design strength and materials limits specified in Table 1 and to produce concrete having proper placability, durability, strength, appearance and other required properties. Proportion ingredients to produce a homogenous mixture which will readily work into corners and angles of forms and around reinforcement without permitting materials to segregate or allowing excessive free water to collect on the surface.

C. The design mix shall be based on standard deviation data of prior mixes with essentially the same proportions of the same constituents or, if such data is not available, be developed by a testing laboratory, acceptable to the Engineer, engaged by and at the expense of the Contractor. Acceptance of mixes based on standard deviation shall be based on the modification factors for standard deviation tests contained in ACI 318. The water content of the concrete mix, determined by laboratory testing, shall be based on a curve showing the relation between water cementitious ratio and 7 and 28 day compressive strengths of concrete made using the proposed materials. The curves shall be determined by four or more points, each representing an average value of at least three test specimens at each age. The curves shall have a range of values sufficient to yield the desired data, including the specified design strengths as modified below, without extrapolation. The water content of the concrete mixes to be used, as determined from the curve, shall correspond to strengths 16 percent greater than the specified design strengths. The resulting mix shall not conflict with the limiting values for maximum water cementitious ratio and net minimum cementitious content as specified in Table 1.

D. Compression Tests: Provide testing of the proposed concrete mix or mixes to demonstrate compliance with the specified design strength requirements in conformity with the above paragraph.

E. Entrained air, as measured by ASTM C231, shall be as shown in Table 1.

1. If the air-entraining agent proposed for use in the mix requires testing methods other than ASTM C231 to accurately determine air content, make special note of this requirement in the admixture submittal.

F. Slump of the concrete as measured by ASTM C143, shall be as shown in Table 1. If a high-range water-reducer (plasticizer) is used, the slump indicated shall be that measured before plasticizer is added. Plasticized concrete shall have a slump ranging from 5 to 8-in.

G. Proportion admixtures according to the manufacturer's recommendations. Two or more admixtures specified may be used in the same mix provided that the admixtures in combination retain full efficiency and have no deleterious effect on the concrete or on the properties of each other.

TABLE 1					
CONCERTE MIX REQUIREMENTS					
Class	Design Strength (1)	Cement (2)	Fine Aggregate (2)	Coarse Aggregate (3)	Cementitious Content (4)
A	2500	C150 Type II	C33	57	440 min.
B	3000	C150 Type II	C33	57	480 min.
C	4000	C150 Type II	C33	57	560 min.
D	5000	C150 Type II	C33	57	600 min.

Class	W/CM Ratio (5)	Fly Ash	AE Range (6)	WR (7)	HRWR (8)	Slump Range Inches
A	0.62 max.	--	3.5 to 5	Yes	*	1-4
B	0.54 max.	--	3.5 to 5	Yes	*	1-3
C	0.44 max.	25% max	3.5 to 5	Yes	*	3-5
D	0.40 max.	--	3.5 to 5	Yes	*	3-5

NOTES:

(1) Minimum compressive strength in psi at 28 days

(2) ASTM designation

(3) Size Number in ASTM C33

(4) Cementitious content in lbs/cu yd

(5) W/Cm is Water-Cementitious ratio by weight

(6) AE is percent air-entrainment

(7) WR is water-reducer admixture

(8) HRWR is high-range water-reducer admixture

* HRWR used at contractor's option except where walls are 14" thick or less and the wall height exceeds 12 ft a mix including a plasticizer must be used.

3 EXECUTION

3.1 MEASURING MATERIALS

A. Concrete shall be composed of portland cement, fine aggregate, coarse aggregate, water and admixtures as specified and shall be produced by a plant acceptable to the Engineer. All constituents, including admixtures, shall be batched at the plant except a high-range water-reducer may also be added in the field.

B. Measure materials for batching concrete by weighing in conformity with and within the tolerances given in ASTM C94 except as otherwise specified. Scales shall have been certified by the local Sealer of Weights and Measures within 1 year of use.

C. Measure the amount of free water in fine aggregates within 0.3 percent with a moisture meter. Compensate for varying moisture contents of fine aggregates. Record the number of gallons of water as-batched on printed batching tickets.

D. Admixtures shall be dispensed either manually using calibrated containers or measuring tanks, or by means of an automatic dispenser approved by the manufacturer of the specific admixture.

1. Charge air-entraining and chemical admixtures into the mixer as a solution using an automatic dispenser or similar metering device.

2. Inject multiple admixtures separately during the batching sequence.

3.2 MIXING AND TRANSPORTING

A. Batch plants shall have a current NRMCA Certification or equal.

B. Concrete shall be ready-mixed concrete produced by equipment acceptable to the Engineer. No hand-mixing will be permitted. Clean each transit mix truck drum and reverse drum rotation before the truck proceeds under the batching plant. Equip each transit-mix truck with a continuous, nonreversible, revolution counter showing the number of revolutions at mixing speeds.

C. Ready-mix concrete shall be transported to the site in watertight agitator or mixer trucks loaded not in excess of their rated capacities as stated on the name plate.

D. Keep the water tank valve on each transit truck locked at all times. Any addition of water above the appropriate W/Cm ratio must be directed by the Engineer. Added water shall be incorporated by additional mixing of at least 35 revolutions. All added water shall be metered and the amount of water added shall be shown on each delivery ticket.

E. All central plant and rolling stock equipment and methods shall comply with ACI 318 and ASTM C94.

F. Select equipment of size and design to ensure continuous flow of concrete at the delivery end. Metal or metal-lined non-aluminum discharge chutes shall be used and shall have slopes not exceeding 1 vertical to 2 horizontal and not less than 1 vertical to 3 horizontal. Chutes more than 20-ft long and chutes not meeting slope requirements may be used if concrete is discharged into a hopper before distribution.

G. Retempering (mixing with or without additional cement, aggregate, or water) of concrete or mortar which has reached initial set will not be permitted.

H. Handle concrete from mixer to placement as quickly as practicable while providing concrete of required quality in the placement area. Dispatch trucks from the batching plant so they arrive at the work site just before the concrete is required, thus avoiding excessive mixing of concrete while waiting or delays in placing successive layers of concrete in the forms.

I. Furnish a delivery ticket for ready mixed concrete to the Engineer as each truck arrives. Each ticket shall provide a printed record of the weight of cement and each aggregate as batched individually. Use the type of indicator that returns for zero punch or returns to zero after a batch is discharged. Clearly indicate the weight of fine and coarse aggregate, cement and water in each batch, the quantity delivered, the time any water is added, and the numerical sequence of the delivery. Show the time of day batched and time of discharge from the truck. Indicate the number of revolutions of the truck mixer.

J. Temperature and Mixing Time Control

1. In cold weather, do not allow the as-mixed temperature of the concrete and concrete temperatures at the time of placement in the forms to drop below 40 degrees F.

2. If water or aggregate has been heated, combine water with aggregate in the mixer before cement is added. Do not add cement to mixtures of water and aggregate when the temperature of the mixture is greater than 90 degrees F.

3. In hot weather, cool ingredients before mixing to maintain temperature of the concrete below the maximum placing temperature of 90 degrees F. If necessary, substitute well-crushed ice for all or part of the mixing water.
4. The maximum time interval between the addition of mixing water and/or cement to the batch and the placing of concrete in the forms shall not exceed the values shown in Table 2.

TABLE 2	
MAXIMUM TIME TO DISCHARGE OF CONCRETE	
Air or Concrete Temperature (whichever is higher)	Maximum Time
80 to 90 Degree F (27 to 32 Degree C)	45 minutes
70 to 79 Degree F (21 to 26 Degree C)	60 minutes
40 to 69 Degree F (5 to 20 Degree C)	90 minutes

If an approved high-range water-reducer (plasticizer) is used to produce plasticized concrete, the maximum time interval shall not exceed 90 minutes.

3.3 CONCRETE APPEARANCE

A. Concrete mix showing either poor cohesion or poor coating of the coarse aggregate with paste shall be remixed. If this does not correct the condition, the concrete shall be rejected. If the slump is within the allowable limit, but excessive bleeding, poor workability, or poor finishability are observed, changes in the concrete mix shall be obtained only by adjusting one or more of the following:
   1. The gradation of aggregate.
   2. The proportion of fine and coarse aggregate.
   3. The percentage of entrained air, within the allowable limits.

B. Concrete for the work shall provide a homogeneous structure which, when hardened, will have the required strength, durability and appearance. Mixtures and workmanship shall be such that concrete surfaces, when exposed, will require no finishing. When concrete surfaces are stripped, the concrete, when viewed in good lighting from 10-ft away, shall be pleasing in appearance, and at 20-ft shall show no visible defects.

3.4 PLACING AND COMPACTING

A. Placing
   1. Verify that all formwork completely encloses concrete to be placed and is securely braced prior to concrete placement. Remove ice, excess water, dirt and other foreign materials from forms. Confirm that reinforcement and other embedded items are securely in place. Have a competent workman at the location of the placement who can assure that reinforcing steel and embedded items remain in designated locations while concrete is being placed. Sprinkle semi-porous subgrades or forms to eliminate suction of water from the mix. Seal extremely porous subgrades in an approved manner.
   2. Deposit concrete as near its final position as possible to avoid segregation due to rehandling or flowing. Place concrete continuously at a rate which ensures the concrete is being integrated with fresh plastic concrete. Do not deposit concrete which has partially hardened or has been contaminated by foreign materials or on concrete which has hardened sufficiently to cause formation of seams or planes of weakness within the section. If the section cannot be placed continuously, place construction joints as specified or as approved.

3. Pumping of concrete will be permitted. Use a mix design and aggregate sizes suitable for pumping and submit for approval.
4. Remove temporary spreaders from forms when the spreader is no longer useful. Temporary spreaders may remain embedded in concrete only when made of galvanized metal or concrete and if prior approval has been obtained.
5. Do not place concrete for supported elements until concrete previously placed in the supporting element (columns, slabs and/or walls) has reached adequate strength.
6. Where surface mortar is to form the base of a finish, especially surfaces designated to be painted, work coarse aggregate back from forms with a suitable tool to bring the full surface of the mortar against the form. Prevent the formation of excessive surface voids.
7. Slabs
    a. After suitable bulkheads, screeds and jointing materials have been positioned, the concrete shall be placed continuously between construction joints beginning at a bulkhead, edge form, or corner. Each batch shall be placed into the edge of the previously placed concrete to avoid stone pockets and segregation.
    b. Avoid delays in casting. If there is a delay in casting, the concrete placed after the delay shall be thoroughly spaded and consolidated at the edge of that previously placed to avoid cold joints. Concrete shall then be brought to correct level and struck off with a straightedge. Bullfloats or darbies shall be used to smooth the surface, leaving it free of humps or hollows.
    c. Where slabs are to be placed integrally with the walls below them, place the walls and compact as specified. Allow 1 hour to pass between placement of the wall and the overlying slab to permit consolidation of the wall concrete. Keep the top surface of the wall moist so as to prevent cold joints.
8. Formed Concrete
    a. Place concrete in forms using tremie tubes and taking care to prevent segregation. Bottom of tremie tubes shall preferably be in contact with the concrete already placed. Do not permit concrete to drop freely more than 4-ft. Place concrete for walls in 12 to 24-in lifts, keeping the surface horizontal. If plasticized concrete is used, the maximum lift thickness may be increased to 4-ft.
9. Underwater concreting shall be performed in conformity with the recommendations of ACI 304R. The tremie system shall be used to place underwater concrete. Tremie pipes shall be in the range of 8 to 12-in in diameter and be spaced at not more than 16-ft on centers nor more than 8-ft from an end form. Where concrete is being placed around a pipe, there shall be at least one tremie pipe on each side of each pipe. Where the tremie system is not practical, direct pumped concrete for underwater placement may be used subject to approval of the system including details by the Engineer.

B. Compacting
1. Consolidate concrete by vibration, puddling, spading, rodding or forking so that concrete is thoroughly worked around reinforcement, embedded items and openings and into corners of forms. Puddling, spading, etc, shall be continuously performed along with vibration of the placement to eliminate air or stone pockets which may cause honeycombing, pitting or planes of weakness.
2. All concrete shall be placed and compacted with mechanical vibrators. The number, type and size of the units shall be approved by the Engineer in advance of placing operations. No concrete shall be ordered until sufficient approved vibrators (including standby units in working order) are on the job.

3. A minimum frequency of 7000 rpm is required for mechanical vibrators. Insert vibrators and withdraw at points from 18 to 30-in apart. At each insertion, vibrate sufficiently to consolidate concrete, generally from 5 to 15 seconds. Do not over vibrate so as to segregate. Keep a spare vibrator on the site during concrete placing operations.
4. Concrete Slabs: Concrete for slabs less than 8-in thick shall be consolidated with vibrating screeds; slabs 8 to 12-in thick shall be compacted with internal vibrators and (optionally) with vibrating screeds. Vibrators shall always be placed into concrete vertically and shall not be laid horizontally or laid over.
5. Walls and Columns: Internal vibrators (rather than form vibrators) shall be used unless otherwise approved by the Engineer. In general, for each vibrator needed to melt down the batch at the point of discharge, one or more additional vibrators must be used to densify, homogenize and perfect the surface. The vibrators shall be inserted vertically at regular intervals, through the fresh concrete and slightly into the previous lift, if any.
6. Amount of Vibration: Vibrators are to be used to consolidate properly placed concrete but shall not be used to move or transport concrete in the forms. Vibration shall continue until:
   a. Frequency returns to normal.
   b. Surface appears liquefied, flattened and glistening.
   c. Trapped air ceases to rise.
   d. Coarse aggregate has blended into surface, but has not disappeared.

3.5 CURING AND PROTECTION

A. Protect all concrete work against injury from the elements and defacements of any nature during construction operations.

B. Curing Methods

1. Curing Methods for Concrete Surfaces: Cure concrete to retain moisture and maintain specified temperature at the surface for a minimum of 7 days after placement. Curing methods to be used are as follows:
   a. Water Curing: Keep entire concrete surface wet by ponding, continuous sprinkling or covered with saturated burlap. Begin wet cure as soon as concrete attains an initial set and maintain wet cure 24 hours a day.
   b. Sheet Material Curing: Cover entire surface with sheet material. Securely anchor sheeting to prevent wind and air from lifting the sheeting or entrapping air under the sheet. Place and secure sheet as soon as initial concrete set occurs.
   c. Liquid Membrane Curing: Apply over the entire concrete surface except for surfaces to receive additional concrete. Curing compound shall NOT be placed on any concrete surface where additional concrete is to be placed, where concrete sealers or surface coatings are to be used, or where the concrete finish requires an integral floor product. Curing compound shall be applied as soon as the free water on the surface has disappeared and no water sheen is visible, but not after the concrete is dry or when the curing compound can be absorbed into the concrete. Application shall be in compliance with the manufacturer's recommendations.
2. Specified applications of curing methods.
   a. Slabs for Water Containment Structures: Water curing only.
   b. Slabs on Grade and Footings (not used to contain water): Water curing, sheet material curing or liquid membrane curing.
   c. Structural Slabs (other than water containment): Water curing or liquid membrane curing.
   d. Horizontal Surfaces which will Receive Additional Concrete, Coatings, Grout or Other Material that Requires Bond to the substrate: Water curing.

e. Formed Surfaces: None if nonabsorbent forms are left in place 7 days. Water cure if absorbent forms are used. Sheet cured or liquid membrane cured if forms are removed prior to 7 days. Exposed horizontal surfaces of formed walls or columns shall be water cured for 7 days or until next placement of concrete is made.

f. Surfaces of Concrete Joints: Water cured or sheet material cured.

C. Finished surfaces and slabs shall be protected from the direct rays of the sun to prevent checking and crazing.

D. Cold Weather Concreting:

1. "Cold weather" is defined as a period when for more than 3 successive days, the average daily outdoor temperature drops below 40 degrees F. The average daily temperature shall be calculated as the average of the highest and the lowest temperature during the period from midnight to midnight.

2. Cold weather concreting shall conform to ACI 306.1 and the additional requirements specified herein. Temperatures at the concrete placement shall be recorded at 12 hour intervals (minimum).

3. Discuss a cold weather work plan with the Engineer. The discussion shall encompass the methods and procedures proposed for use during cold weather including the production, transportation, placement, protection, curing and temperature monitoring of the concrete. The procedures to be implemented upon abrupt changes in weather conditions or equipment failures shall also be discussed. Cold weather concreting shall not begin until the work plan is acceptable to the Engineer.

4. During periods of cold weather, concrete shall be protected to provide continuous warm, moist curing (with supplementary heat when required) for a total of at least 350 degree-days of curing.

a. Degree-days are defined as the total number of 24 hour periods multiplied by the weighted average daily air temperature at the surface of the concrete (eg: 5 days at an average 70 degrees F = 350 degree-days).

b. To calculate the weighted average daily air temperature, sum hourly measurements of the air temperature in the shade at the surface of the concrete taking any measurement less than 50 degrees F as 0 degrees F. Divide the sum thus calculated by 24 to obtain the weighted average temperature for that day.

5. Salt, manure or other chemicals shall not be used for protection.

6. The protection period for concrete being water cured shall not be terminated during cold weather until at least 24 hours after water curing has been terminated.

E. Hot Weather Concreting

1. "Hot weather" is defined as any combination of high air temperatures, low relative humidity and wind velocity which produces a rate of evaporation estimated in accordance with ACI 305R, approaching or exceeding 0.2 lbs/sqft/hr).

2. Concrete placed during hot weather, shall be batched, delivered, placed, cured and protected in compliance with the recommendations of ACI 305R and the additional requirements specified herein.

a. Temperature of concrete being placed shall not exceed 90 degrees F and every effort shall be made to maintain a uniform concrete mix temperature below this level. The temperature of the concrete shall be such that it will cause no difficulties from loss of slump, flash set or cold joints.

b. All necessary precautions shall be taken to promptly deliver, to promptly place the concrete upon its arrival at the job and to provide vibration immediately after placement.

c. The Engineer may direct the Contractor to immediately cover plastic concrete with sheet material.

3. Discuss with the Engineer a work plan describing the methods and procedures proposed to use for concrete placement and curing during hot weather periods. Hot weather concreting shall not begin until the work plan is acceptable to the Engineer.

3.6 REMOVAL OF FORMS

A. Except as otherwise specifically authorized by the Engineer, forms shall not be removed before the concrete has attained a strength of at least 70 percent of its specified design strength for beams and slabs and at least 30 percent of its specified design strength for walls and vertical surfaces, nor before reaching the following number of day-degrees of curing (whichever is the longer)

TABLE 3	
MINIMUM TIME TO FORM REMOVAL	
Forms for	Degree Days
Beams and slabs	500
Walls and vertical surfaces	100

B. Shores shall not be removed until the concrete has attained at least 70 percent of its specified design strength and also sufficient strength to support safely its own weight and construction live loads.

3.7 INSPECTION AND FIELD TESTING

A. The batching, mixing, transporting, placing and curing of concrete shall be subject to the inspection of the Engineer at all times. The Contractor shall advise the Engineer of his/her readiness to proceed at least 24 hours prior to each concrete placement. The Engineer will inspect the preparations for concreting including the preparation of previously placed concrete, the reinforcing steel and the alignment, cleanliness and tightness of formwork. No placement shall be made without the inspection and acceptance of the Engineer.

B. Sets of field control cylinder specimens will be taken by the Engineer (or inspector) during the progress of the work, in compliance with ASTM C31. The number of sets of concrete test cylinders taken of each class of concrete placed each day shall not be less than one set per day, nor less than one set for each 150 cu yds of concrete nor less than one set for each 5,000 sq ft of surface area for slabs or walls.

1. A "set" of test cylinders consists of four cylinders: one to be tested at 7 days and two to be tested and their strengths averaged at 28 days. The fourth may be used for a special test at 3 days or to verify strength after 28 days if 28-day test results are low.

2. When the average 28-day compressive strength of the cylinders in any set falls below the specified design strength or below proportional minimum 7 day strengths (where proper relation between seven and 28 day strengths have been established by tests), proportions, water content, or temperature conditions shall be changed to achieve the required strengths.

C. Cooperate in the making of tests by allowing free access to the work for the selection of samples, providing an insulated closed curing box for specimens, affording protection to the specimens against injury or loss through the operations and furnish material and labor required for the purpose of taking concrete cylinder samples. All shipping of specimens will be paid for by the Owner. Curing boxes shall be acceptable to the Engineer.

D. Slump tests will be made in the field immediately prior to placing the concrete. Such tests shall be made in accordance with ASTM C143. If the slump is greater the specified range, the concrete shall be rejected.

E. Air Content: Test for air content shall be made on fresh concrete samples. Air content for concrete made of ordinary aggregates having low absorption shall be made in compliance

with either the pressure method complying with ASTM C231 or by the volumetric method complying with ASTM C173.

F. The Engineer may have cores taken from any questionable area in the concrete work such as construction joints and other locations as required for determination of concrete quality. The results of tests on such cores shall be the basis for acceptance, rejection or determining the continuation of concrete work.

G. Cooperate in obtaining cores by allowing free access to the work and permitting the use of ladders, scaffolding and such incidental equipment as may be required. Repair all core holes. The work of cutting and testing the cores will be at the expense of the Owner.

H. See Specification Section 03900 for Leak Testing.

3.8 FAILURE TO MEET REQUIREMENTS

A. Should the strengths shown by the test specimens made and tested in compliance with the previous provisions fall below the values given in Table 1, the Engineer shall have the right to require changes in proportions outlined to apply to the remainder of the work. Furthermore, the Engineer shall have the right to require additional curing on those portions of the structure represented by the test specimens which failed. The cost of such additional curing shall be at the Contractor's expense. In the event that such additional curing does not give the strength required, as evidenced by core and/or load tests, the Engineer shall have the right to require strengthening or replacement of those portions of the structure which fail to develop the required strength. The cost of all such core borings and/or load tests and any strengthening or concrete replacement required because strengths of test specimens are below that specified, shall be entirely at the expense of the Contractor. In such cases of failure to meet strength requirements the Contractor and Engineer shall confer to determine what adjustment, if any, can be made in compliance with Sections titled "Strength" and "Failure to Meet Strength Requirements" of ASTM C94. The "purchaser" referred to in ASTM C94 is the Contractor in this Section.

B. When the tests on control specimens of concrete fall below the specified strength, the Engineer will permit check tests for strengths to be made by means of typical cores drilled from the structure in compliance with ASTM C42 and C39. In the case of cores not indicating adequate strength, the Engineer, in addition to other recourses, may require, at the Contractor's expense, load tests on any one of the slabs, beams, piles, caps, and columns in which such concrete was used. Tests need not be made until concrete has aged 60 days.

C. Should the strength of test cylinders fall below 60 percent of the required minimum 28-day strength, the concrete shall be rejected and shall be removed and replaced.

3.9 PATCHING AND REPAIRS

A. It is the intent of this Section to require quality work including adequate forming, proper mixture and placement of concrete and curing so completed concrete surfaces will require no patching.

B. Defective concrete and honeycombed areas as determined by the Engineer shall be repaired as specified by the Engineer.

C. As soon as the forms have been stripped and the concrete surfaces exposed, fins and other projections shall be removed; recesses left by the removal of form ties shall be filled; and surface defects which do not impair structural strength shall be repaired. Clean all exposed concrete surfaces and adjoining work stained by leakage of concrete, to approval of the Engineer.

D. Immediately after removal of forms remove plugs and break off metal ties as required by Section 03100. Promptly fill holes upon stripping as follows: Moisten the hole with water, followed by a 1/16-in brush coat of neat cement slurry mixed to the consistency of a heavy paste. Immediately plug the hole with a 1 to 1.5 mixture of cement and concrete sand mixed slightly damp to the touch (just short of "balling"). Hammer the grout into the hole

until dense, and an excess of paste appears on the surface in the form of a spiderweb. Trowel smooth with heavy pressure. Avoid burnishing.

E. When patching exposed surfaces the same source of cement and sand as used in the parent concrete shall be employed. Adjust color if necessary by addition of proper amounts of white cement. Rub lightly with a fine Carborundum stone at an age of 1 to 5 days if necessary to bring the surface down with the parent concrete. Exercise care to avoid damaging or staining the virgin skin of the surrounding parent concrete. Wash thoroughly to remove all rubbed matter.

3.10 SCHEDULE

A. The following (Table 4) are the general applications for the various concrete classes and design strengths:

TABLE 4		
CONCRETE SCHEDULE		
Class	Design Strength (psi)	Description
A	2,500	Concrete fill and duct encasement
B	3,000	Concrete overlay slabs and pavement
C	4,000	Walls, slabs on grade, suspended slab and beam systems, columns, grade beams and all other structural concrete
D	5,000	Prestressed concrete

** END OF SECTION **

SECTION 03350
CONCRETE FINISHES

1 GENERAL

1.1 SCOPE OF WORK

A. Furnish all labor, materials, equipment and incidentals required and finish cast-in-place concrete surfaces as shown on the Drawings and as specified herein.

1.2 RELATED WORK

A. Cast-In-Place Concrete is included in Section 03300.

B. Grout is included in Section 03600.

1.3 SUBMITTALS

A. Submit to the Engineer, in accordance with Section 01300, shop drawings and product data showing materials of construction and details of installation for:

1. Concrete sealer. Confirmation that the sealer is compatible with additionally applied coatings shall also be submitted.

1.4 REFERENCE STANDARDS

A. American Society for Testing and Materials (ASTM)

1. ASTM C33 - Standard Specification for Concrete Aggregates.

B. Where reference is made to one of the above standards, the revision in effect at the time of bid opening shall apply.

1.5 QUALITY ASSURANCE

A. Finishes

1. For concrete which will receive additional applied finishes or materials, the surface finish specified is required for the proper application of the specified manufacturer's products. Where alternate products are approved for use, determine if changes in finishes are required and provide the proper finishes to receive these products.

2. Changes in finishes made to accommodate products different from those specified shall be performed at no additional cost to the Owner. Submit the proposed new finishes and their construction methods to the Engineer for approval.

3. Services of Manufacturer's Representative

a. Make available at no extra cost to the Owner, upon 72 hours notification, the services of a qualified field representative of the manufacturer of curing compound, sealer or hardener to instruct the user on the proper application of the product under prevailing job conditions.

2 PRODUCTS

2.1 MATERIALS

A. Chemical hardener shall be Lapidolith by Sonneborn; Hornolith by A.C. Horn; Penalith by W.R. Meadows or equal fluosilicate base material.

B. Concrete sealer shall be "MasterKure CC 180 WB", by Master Builders Solutions, Shakopee, MN or equal.

3 EXECUTION

3.1 FORMED SURFACES

A. Forms shall not be removed before the requirements of Section 03300, have been satisfied.

B. Exercise care to prevent damaging edges or obliterating the lines of chamfers, rustications or corners when removing the forms or performing any other work adjacent thereto.

C. Clean all exposed concrete surfaces and adjoining work stained by leakage of concrete.

D. Rough-Form Finish

1. Immediately after stripping forms and before concrete has changed color, carefully remove all fins and projections.
2. Promptly fill holes left by tie cones and defects as specified in Section 03300.

E. Rubbed Finish

1. Immediately upon stripping forms and before concrete has changed color, carefully remove all fins. While the wall is still damp apply a thin coat of medium consistency neat cement slurry by means of bristle brushes to provide a bonding coat within all pits, air holes or blemishes in the parent concrete. Avoid coating large areas with the slurry at one time.
2. Before the slurry has dried or changed color, apply a dry (almost crumbly) grout proportioned by volume and consisting of 1 part cement to 1-1/2 parts of clean masonry sand having a fineness modulus of approximately 2.3 and complying with the gradation requirements of ASTM C33 for such a material. Grout shall be uniformly applied by means of damp pads of coarse burlap approximately 6-in square used as a float. Scrub grout into the pits and air holes to provide a dense mortar in all imperfections.
3. Allow the mortar to partially harden for 1 or 2 hours depending upon the weather. If the air is hot and dry, keep the wall damp during this period using a fine, fog spray. When the grout has hardened sufficiently so it can be scraped from the surface with the edge of a steel trowel without damaging the grout in the small pits or holes, cut off all that can be removed with a trowel. (Note: Grout allowed to remain on the wall too long will harden and will be difficult to remove.)
4. Allow the surface to dry thoroughly and rub it vigorously with clean dry burlap to completely remove any dried grout. No visible film of grout shall remain after this rubbing. The entire cleaning operation for any area must be completed the day it is started. Do not leave grout on surfaces overnight. Allow sufficient time for grout to dry after it has been cutoff with the trowel so it can be wiped off clean with the burlap.
5. On the day following the repair of pits, air holes and blemishes, the walls shall again be wiped off clean with dry, used pieces of burlap containing old hardened mortar which will act as a mild abrasive. After this treatment, there shall be no built-up film remaining on the parent surface. If, however, such a film is present, a fine abrasive stone shall be used to remove all such material without breaking through the surface film of the original concrete. Such scrubbing shall be light and sufficient only to remove excess material without changing the texture of the concrete.
6. A thorough wash-down with stiff bristle brushes shall follow the final bagging or stoning operation. No extraneous materials shall remain on the surface of the wall. The wall shall be sprayed with a fine fog spray periodically to maintain a continually damp condition for at least 3 days after the application of the repair grout.
7. It is the intent of this finish to provide a surface that is uniform in appearance with no blemishes, imperfections, discolorations, etc.

F. Abrasive Blast Finish

1. Coordinate with Rubbed Finish application. Do not begin until Rubbed Finish operation is complete or before concrete has reached minimum 7-day strength. The Rubbed Finish application may be deleted by the Engineer if the unfinished concrete surface is of superior quality. Apply the abrasive blast finish only where indicated on Drawings.
2. Prepare a sample area of minimum 4-ft high by 16-ft wide Blast Finish as directed by Engineer on a portion of new wall construction which will not be exposed in the final work. Sample area shall contain a variety of finishes obtained with different nozzles, nozzle pressures, grit materials and blasting techniques for selection by Engineer. Final accepted sample shall remain exposed until completion of all Blast Finish operations.
3. Blast finish operation shall meet all regulatory agency requirements. Blast Finish contractor shall be responsible for obtaining all required permits and/or licenses.
4. Perform abrasive blast finishing in as continuous an operation as possible, utilizing the same work crew to maintain continuity of finish on each surface or area of work. Maintain patterns or variances in depths of blast as present on the accepted sample.
5. Use an abrasive grit of proper type and gradation as well as equipment and technique to expose aggregate and surrounding matrix surfaces as follows:
    a. Medium: Generally expose coarse aggregate - 1/4-in to 3/8-in reveal.
6. Abrasive blast corners and edge of patterns carefully, using back-up boards, to maintain uniform corner or edge line. Determine type of nozzle, nozzle pressure and blasting techniques required to match Architect's samples.
7. Upon completion of the Blast Finish operation, thoroughly flush finished surfaces with clean clear water to remove residual dust and grit. Allow to air dry until curing of concrete is complete.
8. After the concrete has cured for a minimum of 28 days, apply a clear acrylic sealer as directed by manufacturer.

3.2 FLOORS AND SLABS

A. Floated Finish

1. Machine Floating
    a. Screed floors and slabs with straightedges to the established grades shown on the Drawings. Immediately after final screeding, a dry cement/sand shake in the proportion of two sacks of portland cement to 350 lbs of coarse natural concrete sand shall be sprinkled evenly over the surface at the rate of approximately 500 lbs /1,000 sq ft of floor. Do not sprinkle neat, dry cement on the surface.
    b. The application of the cement/sand shake may be eliminated at the discretion of the Engineer if the base slab concrete exhibits adequate fattiness and homogeneity and the need is not indicated. When the concrete has hardened sufficiently to support the weight of a power float without its digging into or disrupting the level surface, thoroughly float the shake into the surface with a heavy revolving disc type power compacting machine capable of providing a 200 lb compaction force distributed over a 24-in diameter disc.
    c. Start floating along walls and around columns and then move systematically across the surface leaving a matte finish.
    d. The compacting machine shall be the "Kelly Power Float with Compaction Control" as manufactured by Kelley Industries of SSP Construction Equipment Inc., Pomona, CA or equal. Troweling machines equipped with float (shoe) blades that are slipped over the trowel blades may be used for floating. Floating with a troweling machine equipped with normal trowel blades will not be permitted. The use of any floating or troweling machine which has a water attachment for wetting the concrete surface during finishing will not be permitted.
2. Hand Floating

a. In lieu of power floating, small areas may be compacted by hand floating. The dry cement/sand shake previously specified shall be used unless specifically eliminated by the Engineer. Screed the floors and slabs with straightedges to the established grades shown on the Drawings. While the concrete is still green, but sufficiently hardened to support a finisher and kneeboards with no more than 1/4-in indentation, wood float to a true, even plane with no coarse aggregate visible. Use sufficient pressure on the wood floats to bring moisture to the surface.

3. Finishing Tolerances

a. Level floors and slabs to a tolerance of plus or minus 1/8-in when checked with a 10-ft straightedge placed anywhere on the slab in any direction. Where drains occur, pitch floors to drains such that there are no low spots left undrained. Failure to meet either of the above requirements shall be cause for removal, grinding, or other correction as directed by the Engineer.

B. Broom Finish

1. Screed slabs with straightedges to the established grades indicated on the Drawings. When the concrete has stiffened sufficiently to maintain small surface indentations, draw a stiff bristle broom lightly across the surface in the direction of drainage, or, in the case of walks and stairs, perpendicular to the direction of traffic to provide a non-slip surface.

C. Steel Trowel Finish

1. Finish concrete as specified in Paragraph 3.04 and 3.05. Then, hand steel trowel to a perfectly smooth hard even finish free from high or low spots or other defects.

D. Concrete Sealer

1. Prepare and seal surfaces indicated on the room finish schedule to receive a sealer as follows:

a. Finish concrete as specified in the preceding paragraphs and in accordance with the Schedule in Paragraph 3.05 below.

b. Newly Placed Concrete: Surface must be sound and properly finished. Surface is application-ready when it is damp but not wet and can no longer be marred by walking workmen.

c. Newly-Cured Bare Concrete: Level any spots gouged out by trades. Remove all dirt, dust, droppage, oil, grease, asphalt and foreign matter. Cleanse with caustics and detergents as required. Rinse thoroughly and allow to dry so that surface is no more than damp, and not wet.

d. Aged Concrete: Restore surface soundness by patching, grouting, filling cracks and holes, etc. Surface must also be free of any dust, dirt and other foreign matter. Use power tools and/or strippers to remove any incompatible sealers or coatings. Cleanse as required, following the procedure indicated under cured concrete.

e. Methods: Apply sealer so as to form a continuous, uniform film by spray, soft-bristle pushbroom, long-nap roller or lambswool applicator. Ordinary garden-type sprayers, using neoprene hose, are recommended for best results.

f. Applications: For curing only, apply first coat evenly and uniformly as soon as possible after final finishing at the rate of 200 to 400 sq ft per gallon. Apply second coat when all trades are completed and structure is ready for occupancy at the rate of 400 to 600 sq ft per gallon.

g. To meet guarantee and to seal and dustproof, two coats are required. For sealing new concrete, both coats shall be applied full-strength. On aged concrete, when renovating, dustproofing and sealing, the first coat should be thinned 10 to 15 percent with reducer per manufacturer's directions.

3.3 CONCRETE RECEIVING CHEMICAL HARDENER

A. After 28 days, minimum, concrete cure, apply chemical hardener in three applications to a minimum total coverage of the undiluted chemical of 100 sq ft per gallon and in accordance with manufacturer's recommendations as reviewed.

3.4 APPROVAL OF FINISHES

A. All concrete surfaces, when finished, will be inspected by the Engineer.

B. Surfaces which, in the opinion of the Engineer, are unsatisfactory shall be refinished or reworked.

C. After finishing horizontal surfaces, regardless of the finishing procedure specified, the concrete shall be cured in compliance with Section 03300 unless otherwise directed by the Engineer.

3.5 SCHEDULE OF FINISHES

A. Concrete shall be finished as specified either to remain as natural concrete to receive an additional applied finish or material under another section.

B. Concrete for the following conditions shall be finished as noted on the Drawings and as further specified herein:

1. Concrete to Receive Dampproofing: Rough-form finish. See Paragraph 3.01D above.
2. Concrete Not Exposed to View and Not Scheduled to Receive an Additional Applied Finish or Material: Rough-form finish. See Paragraph 3.01D above.
3. Exterior Vertical Concrete Above Grade Exposed to View: Rubbed finish. See Paragraph 3.01E above.
4. Interior Vertical Concrete Exposed to View Except in Water Containment Areas: Rubbed finish. See Paragraph 3.01E above.
5. Vertical Concrete in Water Containment Areas. Rubbed finish on exposed surfaces and extending to two feet below normal operating water level: Rough-form finish on remainder of submerged areas. See Paragraphs 3.01E and 3.01D above.
6. Interior and Exterior Underside of Concrete Exposed to View: Rubbed finish. See Paragraph 3.01E above.
7. Exterior surfaces exposed to view and indicated to have an abrasive blast finish. See Paragraph 3.01F above.
8. Interior or Exterior Horizontal Concrete not Requiring Floor Hardener or Sealer: Floated finish. See Paragraph 3.02A above.
9. Concrete for Exterior Walks, Interior and Exterior Stairs: Broomed finish perpendicular to direction of traffic. See Paragraph 3.02B above.
10. Concrete Slabs On Which Process Liquids Flow or In Contact with Sludge: Steel trowel finish. See Paragraph 3.02C above.
11. Concrete to Receive Hardener: See Paragraph 3.03 above.
12. Concrete to Receive Floor Sealer: See Paragraph 3.02D above.
13. Concrete tank bottoms to be covered with grout: See Section 03600.

** END OF SECTION **

SECTION 03600
GROUT

1 GENERAL

1.1 SCOPE OF WORK

A. Furnish all labor, materials, equipment and incidentals required and install grout complete as shown on the Drawings and as specified herein.

1.2 RELATED WORK

A. Concrete Reinforcement is included in Section 03200.

B. Concrete Joints and Joint Accessories are included in Section 03350.

C. Cast-in-Place Concrete is included in Section 03300.

D. Masonry Grout is included in Section 04230.

1.3 SUBMITTALS

A. Submit to the Engineer, in accordance with Section 01300, shop drawings and product data showing materials of construction and details of installation for:

1. Commercially manufactured nonshrink cementitous grout. The submittal shall include catalog cuts, technical data, storage requirements, product life, working time after mixing, temperature considerations, conformity to required ASTM standards and Material Safety Data Sheet.

2. Commercially manufactured nonshrink epoxy grout. The submittal shall include catalog cuts, technical data, storage requirements, product life, working time after mixing, temperature considerations, conformity to required ASTM standards and Material Safety Data Sheet.

3. Cement grout. The submittal shall include the type and brand of the cement, the gradation of the fine aggregate, product data on any proposed admixtures and the proposed mix of the grout.

4. Concrete grout. The submittal shall include data as required for concrete as delineated in Section 03300 and for fiber reinforcement as delineated in Section 03200. This includes the mix design, constituent quantities per cubic yard and the water/cement ratio.

B. Laboratory Test Reports

1. Submit laboratory test data as required under Section 03300 for concrete to be used as concrete grout.

C. Certifications

1. Certify that commercially manufactured grout products and concrete grout admixtures are suitable for use in contact with potable water after 30 days curing.

D. Qualifications

1. Grout manufacturers shall submit documentation that they have at least 10 years experience in the production and use of the proposed grouts which they will supply.

1.4 REFERENCE STANDARDS

A. American Society for Testing and Materials (ASTM)

1. ASTM C531 - Standard Test Method for Linear Shrinkage and Coefficient of Thermal Expansion of Chemical Resistant Mortars, Grouts and Monolithic Surfacings and Polymer Concretes

2. ASTM C579 - Standard Test Method for Compressive Strength of Chemical Resistant Mortars, Grouts and Monolithic Surfacings and Polymer Concretes

3. ASTM C827 - Standard Test Method for Change in Height at Early Ages of Cylindrical Specimens from Cementitious Mixtures
4. ASTM C1107 - Standard Specification for Packaged Dry, Hydraulic-Cement Grout (Nonshrink)

B. U.S. Army Corps of Engineers Standard (CRD)

1. CRD C-621 - Corps of Engineers Specification for Nonshrink Grout

C. Where reference is made to one of the above standards, the revision in effect at the time of bid opening shall apply.

1.5 QUALITY ASSURANCE

A. Qualifications

1. Grout manufacturer shall have a minimum of 10 years experience in the production and use of the type of grout proposed for the work.

B. Pre-installation Conference

1. Well in advance of grouting, hold a pre-installation meeting to review the requirements for surface preparation, mixing, placing and curing procedures for each product proposed for use. Parties concerned with grouting shall be notified of the meeting at least 10 days prior to its scheduled date.

C. Services of Manufacturer's Representative

1. A qualified field technician of the nonshrink grout manufacturer, specifically trained in the installation of the products, shall attend the pre-installation conference and shall be present for the initial installation of each type of nonshrink grout. Additional services shall also be provided, as required, to correct installation problems.

D. Field Testing

1. All field testing and inspection services required shall be provided by the Owner. The Contractor shall assist in the sampling of materials and shall provide any ladders, platforms, etc, for access to the work. The methods of testing shall comply in detail with the applicable ASTM Standards.
2. The field testing of Concrete Grout shall be as specified for concrete in Section 03300.

1.6 DELIVERY, STORAGE AND HANDLING

A. Deliver materials to the jobsite in original, unopened packages, clearly labeled with the manufacturer's name, product identification, batch numbers and printed instructions.

B. Store materials in full compliance with the manufacturer's recommendations. Total storage time from date of manufacture to date of installation shall be limited to 6 months or the manufacturer's recommended storage time, whichever is less.

C. Material which becomes damp or otherwise unacceptable shall be immediately removed from the site and replaced with acceptable material at no additional expense to the Owner.

D. Nonshrink cement-based grouts shall be delivered as preblended, prepackaged mixes requiring only the addition of water.

E. Nonshrink epoxy grouts shall be delivered as premeasured, prepackaged, three component systems requiring only blending as directed by the manufacturer.

1.7 DEFINITIONS

A. Nonshrink Grout: A commercially manufactured product that does not shrink in either the plastic or hardened state, is dimensionally stable in the hardened state and bonds to a clean base plate.

2 PRODUCTS

2.1 GENERAL

A. The use of a manufacturer's name and product or catalog number is for the purpose of establishing the standard of quality desired.

B. Like materials shall be the products of one manufacturer or supplier in order to provide standardization of appearance.

2.2 MATERIALS

A. Nonshrink Cementitious Grout

1. Nonshrink cementitious grouts shall meet or exceed the requirements of ASTM C1107, Grades B or C and CRD C-621. Grouts shall be portland cement based, contain a pre-proportioned blend of selected aggregates and shrinkage compensating agents and shall require only the addition of water. Nonshrink cementitious grouts shall not contain expansive cement or metallic particles. The grouts shall exhibit no shrinkage when tested in conformity with ASTM C827.

   a. General purpose nonshrink cementitious grout shall conform to the standards stated above and shall be SikaGrout 212 by Sika Corp.; Set Grout by Master Builders, Inc.; Gilco Construction Grout by Gifford Hill & Co.; Euco NS by The Euclid Chemical Co.; NBEC Grout by U. S. Grout Corp. or equal.

   b. Flowable (Precision) nonshrink cementitious grout shall conform to the standards stated above and shall be Masterflow 928 by Master Builders, Inc.; Hi-Flow Grout by the Euclid Chemical Co.; SikaGrout 212 by Sika Corp.; Supreme Grout by Gifford Hill & Co.; Five Star Grout by U. S. Grout Corp. or equal.

B. Nonshrink Epoxy Grout

1. Nonshrink epoxy-based grout shall be a pre-proportioned, three component, 100 percent solids system consisting of epoxy resin, hardener, and blended aggregate. It shall have a compressive strength of 14,000 psi in 7 days when tested in conformity with ASTM D695 and have a maximum thermal expansion of 30×10^{-6} when tested in conformity with ASTM C531. The grout shall be Ceilcote 648 CP by Master Builders Inc.; Five Star Epoxy Grout by U.S. Grout Corp.; Sikadur 42 Grout-Pak by Sika Corp.; High Strength Epoxy Grout by the Euclid Chemical Co. or equal.

C. Cement Grout

1. Cement grouts shall be a mixture of one part portland cement conforming to ASTM C150, Types I, II, or III and 1 to 2 parts sand conforming to ASTM C33 with sufficient water to place the grout. The water content shall be sufficient to impart workability to the grout but not to the degree that it will allow the grout to flow.

D. Concrete Grout

1. Concrete grout shall conform to the requirements of Section 03300 except as specified herein. It shall be proportioned with cement, coarse and fine aggregates, water, water reducer and air entraining agent to produce a mix having an average strength of 2900 psi at 28 days, or 2500 psi nominal strength. Coarse aggregate size shall be 1/2-in maximum. Slump should not exceed 5-in and should be as low as practical yet still retain sufficient workability.

2. Synthetic reinforcing fibers as specified in Section 03200 shall be added to the concrete grout mix at the rate of 1.5 lbs of fibers per cubic yard of grout. Fibers shall be added from the manufacturer's premeasured bags and according to the manufacturer's recommendations in a manner which will ensure complete dispersion of the fiber bundles as single monofilaments within the concrete grout.

E. Water

1. Potable water, free from injurious amounts of oil, acid, alkali, organic matter, or other deleterious substances.

3 EXECUTION

3.1 PREPARATION

A. Grout shall be placed over cured concrete which has attained its full design strength unless otherwise approved by the Engineer.

B. Concrete surfaces to receive grout shall be clean and sound; free of ice, frost, dirt, grease, oil, curing compounds, laitance and paints and free of all loose material or foreign matter which may effect the bond or performance of the grout.

C. Roughen concrete surfaces by chipping, sandblasting, or other mechanical means to a minimum of ¼" amplitude or provide a raked finish in order to ensure bond of the grout to the concrete. Remove loose or broken concrete. Irregular voids or projecting coarse aggregate need not be removed if they are sound, free of laitance and firmly embedded into the parent concrete.

   1. Air compressors used to clean surfaces in contact with grout shall be the oilless type or equipped with an oil trap in the air line to prevent oil from being blown onto the surface.

D. Remove all loose rust, oil or other deleterious substances from metal embedments or bottom of baseplates prior to the installation of the grout.

E. Concrete surfaces shall be washed clean and then kept moist for at least 24 hours prior to the placement of cementitious or cement grout. Saturation may be achieved by covering the concrete with saturated burlap bags, use of a soaker hose, flooding the surface, or other method acceptable to the Engineer. Upon completion of the 24 hour period, visible water shall be removed from the surface prior to grouting. The use of an adhesive bonding agent in lieu of surface saturation shall only be used when approved by the Engineer for each specific location of grout installation.

F. Epoxy-based grouts do not require the saturation of the concrete substrate. Surfaces in contact with epoxy grout shall be completely dry before grouting.

G. Construct grout forms or other leakproof containment as required. Forms shall be lined or coated with release agents recommended by the grout manufacturer. Forms shall be of adequate strength, securely anchored in place and shored to resist the forces imposed by the grout and its placement.

   1. Forms for epoxy grout shall be designed to allow the formation of a hydraulic head and shall have chamfer strips built into forms.

H. Level and align the structural or equipment bearing plates in accordance with the structural requirements and the recommendations of the equipment manufacturer.

I. Equipment shall be supported during alignment and installation of grout by shims, wedges, blocks or other approved means. The shims, wedges and blocking devices shall be prevented from bonding to the grout by appropriate bond breaking coatings and removed after grouting unless otherwise approved by the Engineer.

3.2 INSTALLATION – GENERAL

A. Mix, apply and cure products in strict compliance with the manufacturer's recommendations and this Section.

B. Have sufficient manpower and equipment available for rapid and continuous mixing and placing. Keep all necessary tools and materials ready and close at hand.

C. Maintain temperatures of the foundation plate, supporting concrete, and grout between 40 and 90 degrees F during grouting and for at least 24 hours thereafter or as recommended by the grout manufacturer, whichever is longer. Take precautions to minimize differential heating or cooling of baseplates and grout during the curing period.

D. Take special precautions for hot weather or cold weather grouting as recommended by the manufacturer when ambient temperatures and/or the temperature of the materials in contact with the grout are outside of the 60 and 90 degrees F range.

E. Install grout in a manner which will preserve the isolation between the elements on either side of the joint where grout is placed in the vicinity of an expansion or control joint.

F. Reflect all existing underlying expansion, control and construction joints through the grout.

3.3 INSTALLATION - CEMENT GROUTS AND NONSHRINK CEMENTITIOUS GROUTS

A. Mix in accordance with manufacturer's recommendations. Do not add cement, sand, pea gravel or admixtures without prior approval by the Engineer.

B. Avoid mixing by hand. Mixing in a mortar mixer (with moving blades) is recommended. Pre-wet the mixer and empty excess water. Add premeasured amount of water for mixing, followed by the grout. Begin with the minimum amount of water recommended by the manufacturer and then add the minimum additional water required to obtain workability. Do not exceed the manufacturer's maximum recommended water content.

C. Placements greater than 3-in in depth shall include the addition of clean, washed pea gravel to the grout mix when approved by the manufacturer. Comply with the manufacturer's recommendations for the size and amount of aggregate to be added.

D. Place grout into the designated areas in a manner which will avoid segregation or entrapment of air. Do not vibrate grout to release air or to consolidate the material. Placement should proceed in a manner which will ensure the filling of all spaces and provide full contact between the grout and adjoining surfaces. Provide grout holes as necessary.

E. Place grout rapidly and continuously to avoid cold joints. Do not place cement grouts in layers. Do not add additional water to the mix (retemper) after initial stiffening.

F. Just before the grout reaches its final set, cut back the grout to the substrate at a 45 degree angle from the lower edge of bearing plate unless otherwise approved by the Engineer. Finish this surface with a wood float (brush) finish.

G. Begin curing immediately after form removal, cutback, and finishing. Keep grout moist and within its recommended placement temperature range for at least 24 hours after placement or longer if recommended by the manufacturer. Saturate the grout surface by use of wet burlap, soaker hoses, ponding or other approved means. Provide sunshades as necessary. If drying winds inhibit the ability of a given curing method to keep grout moist, erect wind breaks until wind is no longer a problem or curing is finished.

3.4 INSTALLATION - NONSHRINK EPOXY GROUTS

A. Mix in accordance with the procedures recommended by the manufacturer. Do not vary the ratio of components or add solvent to change the consistency of the grout mix. Do not overmix. Mix full batches only to maintain proper proportions of resin, hardener and aggregate.

B. Monitor ambient weather conditions and contact the grout manufacturer for special placement procedures to be used for temperatures below 60 or above 90 degrees F.

C. Place grout into the designated areas in a manner which will avoid trapping air. Placement methods shall ensure the filling of all spaces and provide full contact between the grout and adjoining surfaces. Provide grout holes as necessary.

D. Minimize "shoulder" length (extension of grout horizontally beyond base plate). In no case shall the shoulder length of the grout be greater than the grout thickness.

E. Finish grout by puddling to cover all aggregate and provide a smooth finish. Break bubbles and smooth the top surface of the grout in conformity with the manufacturer's recommendations.

F. Epoxy grouts are self curing and do not require the application of water. Maintain the formed grout within its recommended placement temperature range for at least 24 hours after placing, or longer if recommended by the manufacturer.

3.5 INSTALLATION - CONCRETE GROUT

A. Screed underlying concrete to the grade shown on the Drawings. Prepare the surface according to 3.01B. Protect and keep the surface clean until placement of concrete grout.

B. Remove the debris and clean the surface by sweeping and vacuuming of all dirt and other foreign materials. Wash the tank slab using a strong jet of water. Flushing of debris into tank drain lines will not be permitted.

C. Saturate the concrete surface for at least 24 hours prior to placement of the concrete grout. Saturation may be maintained by ponding, by the use or soaker hoses, or by other methods acceptable to the Engineer. Remove excess water just prior to placement of the concrete grout. Place a cement slurry immediately ahead of the concrete grout so that the slurry is moist when the grout is placed. Work the slurry over the surface with a broom until it is coated with approximately 1/16 to 1/8-in thick cement paste. (A bonding grout composed of 1 part portland cement, 1.5 parts fine sand, an approved bonding admixture and water, mixed to achieve the consistency of thick paint, may be substituted for the cement slurry.)

D. Place concrete grout to final grade using the scraper mechanism as a guide for surface elevation and to ensure high and low spots are eliminated. Unless specifically approved by the equipment manufacturer, mechanical scraper mechanisms shall not be used as a finishing machine or screed.

E. Provide grout control joints as indicated on the Drawings.

F. Finish and cure the concrete grout as specified for cast-in-place concrete.

3.6 SCHEDULE

A. The following list indicates where the particular types of grout are to be used:

B. General purpose nonshrink cementitious grout: Use at all locations where non shrink grout is called for on the plans except for base plates greater in area than 3-ft wide by 3-ft long and except for the setting of anchor rods, anchor bolts or reinforcing steel in concrete.

C. Flowable nonshrink cementitious grout: Use under all base plates greater in area than 3-ft by 3-ft. Use at all locations indicated to receive flowable nonshrink grout by the Drawings. The Contractor, at his/her option and convenience, may also substitute flowable nonshrink grout for general purpose nonshrink cementitious grout.

D. Nonshrink epoxy grout: Use for the setting of anchor rods, anchor bolts and reinforcing steel in concrete and for all locations specifically indicated to receive epoxy grout.

E. Cement grout: Cement grout may be used for grouting of incidental base plates for structural and miscellaneous steel such as post base plates for platforms, base plates for beams, etc. It shall not be used when nonshrink grout is specifically called for on the Drawings or for grouting of primary structural steel members such as columns and girders.

F. Concrete grout: Use for overlaying the base concrete under scraper mechanisms of clarifiers to allow more control in placing the surface grade.

** END OF SECTION **

SECTION 04200
MASONRY

1 GENERAL

1.1 SCOPE OF WORK

A. Furnish all labor, materials, equipment and incidentals required and construct all masonry work as shown and as specified herein.

B. The work under this Section includes, but is not necessarily limited to, the following:

1. Face brick masonry
2. Concrete masonry units (CMU)
3. Grouting as specified herein.
4. Vertically applied membrane flashing where and as detailed.

1.2 RELATED WORK

A. Masonry Accessories are included in Division 4.

B. Vertical and horizontal deformed steel reinforcing bars for wall reinforcing and CMU lintel reinforcing are furnished under Division 3.

a. Grouting of base plates and equipment is included in Division 3.

C. Miscellaneous metals are included in Division 5.

D. Joint Sealers is included in Division 7.

1.3 SUBMITTALS

A. Submit 2 copies of the masonry manufacturer’s specifications and other data for each type of brick or CMU unit required, including certification that each type complies with the specified requirements.

B. Submit 3 samples of each type of exposed brick required. Include in each set the full range of exposed color and texture to be expected in the completed work. Engineer’s review will be for color and texture only.

1.4 SAMPLES

A. Submit to the Engineer for approval, representative samples of all required masonry and accessory materials. Submit manufacturer's technical information on masonry cleaning product. Submit with samples, manufacturer's technical information, all certifications and test data required to prove compliance with the Specifications and building code.

B. Resubmit as required until approved.

C. After approval of all masonry units and before commencing with the laying of any architectural masonry, construct on the site a sample mockup wall panel of each type of masonry work required. Mockup wall panel shall be 72 inches long x 48 inches high and shall include return ends 16 inches long x 48 inches high. Sample panel shall be typical of work as it will appear in the completed project, including a sample control joint. Sample mockup wall panel shall be approved by the engineer prior to commencement of work.

D. Include special shapes, sills, and corners; include one complete exterior and interior vertical control joint to be caulked under Division 7. Include one length of through-wall flashing to be installed under Division 7 and weep holes as specified. Reconstruct as ordered until approved. This sample wall, when approved, shall become the standard of acceptance for masonry appearance and shall remain in place for the duration of the masonry work. Remove sample panel at the completion of the work as directed by the Engineer.

E. Where brickwork is required to match existing building, construction a sample panel located adjacent to an existing wall to verify the match. The Owner will approve the match.

1.5 PERFORMANCE REQUIREMENTS

A. Provide unit masonry that develops the net-area compressive strengths (f'm) at 28 days as indicated on the structural drawings. Determine compressive strength of masonry from net-area compressive strengths of masonry units and mortar types (using mortar type specified herein) according to Tables 1 and 2 in ACI 530.1/ASCE 6/TMS 602-95.

1.6 PRE-CONSTRUCTION TESTING

A. Pre-construction Testing Service: Owner will engage a qualified independent testing agency to perform preconstruction testing indicated below. Retesting of materials that fail to comply with specified requirements shall be done at Contractor's expense.

1. Masonry Unit Test: For each type of unit required, according to ASTM C 140 for compressive strength.
2. Mortar Test (Property Specification): For each mix required, according to ASTM C 109/C 109M for compressive strength, ASTM C 1506 for water retention, and ASTM C 91 for air content.
3. Mortar Test (Property Specification): For each mix required, according to ASTM C 780 for compressive strength.
4. Grout Test (Compressive Strength): For each mix required, according to ASTM C 1019.
5. Prism Test: For each type of construction required, according to ASTM C 1314.

1.7 PROTECTION OF MATERIALS

A. All perishable materials for the work of this Section shall be delivered stored and handled so as to preclude damage of any nature. Manufactured materials, such as cement and lime, shall be delivered and stored in their original containers, plainly marked with identification of material and maker. Materials in broken containers, or in packages showing water marks or other evidence of damage, shall not be used and shall be removed from the site.

B. All masonry shall be shipped stacked with hay or straw protection or other suitable protective device, and shall be similarly stacked off the ground on the site. In addition, all masonry stored on the site shall be protected from the weather and staining with the use of tarpaulins or other covering approved by the Engineer.

C. All masonry shall be particularly well covered and protected during manufacture, storage, shipping and while on the job site to prevent contamination which may lead to efflorescence in the finished work. If efflorescence occurs in the finished work, the Architect & Engineer may order the removal and replacement of areas so affected.

1.8 COLD AND HOT WEATHER CONSTRUCTION

A. Masonry construction in cold and in hot weather shall conform to the applicable requirements of ACI530.1/ASCE6/TMS 602-95 except where more stringent requirements are specified herein. Heat and enclosures will be the only protection method allowed and no mortar additives shall be used for freezing protection in cold weather.

B. Cold-Weather Cleaning - Use liquid cleaning methods only when air temperature is 40 degrees F and above and will remain so, until masonry has dried, but not less than 7 days after completing cleaning.

1.9 REFERENCE STANDARDS

A. American Concrete Institute (ACI)

1. ACI-530.1/ASCE6/TMS 602-95 - Specifications for Masonry Structures

B. American Society for Testing and Materials (ASTM)

1. ASTM A82 - Standard Specification for Steel Wire, Plain, for Concrete Reinforcement
2. ASTM A153 - Standard Specification for Zinc Coating (Hot-Dip) on Iron and Steel Hardware

3. ASTM A167 - Standard Specification for Stainless and Heat-Resisting Chromium-Nickel Steel Plate, Sheet and Strip
4. ASTM C33 - Standard Specification for Concrete Aggregates
5. ASTM C62 – Standard Specification for Building Brick (Solid Masonry Units Made From Clay or Shale)
6. ASTM C67 - Standard Test Methods of Sampling and Testing Brick and Structural Clay Tile
7. ASTM C90 - Standard Specification for Loadbearing Concrete Masonry Units
8. ASTM C140 - Standard Test Methods of Sampling and Testing Concrete Masonry Units
9. ASTM C144 - Standard Specification for Aggregate for Masonry Mortar
10. ASTM C150 - Standard Specification for Portland Cement
11. ASTM C207 - Standard Specification for Hydrated Lime for Masonry Purposes
12. ASTM C270 - Standard Specification for Mortar for Unit Masonry
13. ASTM C426 - Standard Test Method for Drying Shrinkage of Concrete Block
14. ASTM C476 - Standard Specification for Grout for Masonry

C. Where reference is made to one of the above standard or other standards cited below, the revision in effect at the time of bid opening shall apply except for ACI standard specified above.

2 PRODUCTS

2.1 MATERIALS – BRICK

A. Obtain brick from one manufacture, of uniform texture and color or uniform blend in the variation thereof, for each continuous area and for visually related areas.

B. Size: 3-5/8-inch x 3-5/8-inch x 7-5/8-inch, Jumbo utility closure.

C. Manufacturers: Subject to Engineers and Owners approval, provide face brick to match existing structures located on the project site.

D. Face brick units shall be made of clay or shale material, confirming to the latest specification of ASTM C 216, shall be grade SW, type FBS (normal variations) as established therein.

E. Color and texture of brick units used shall be selected by the Owner from sample panels submitted by the Contractor from the proposed supplier, except when matching existing buildings.

2.2 MATERIALS – MASONRY

A. Concrete Masonry Units (CMU)

1. CMU shall conform to ASTM C90, light weight, Type II, hollow, two-core, load bearing units of 8-inch x 8-inch x 16-inch and 8-inch x 12-inch x 16-inch nominal dimensions.
2. CMU shall be free from substances that will cause staining or pop-outs, and shall be fine, even texture with straight and true edges. All units shall be air cured in covered storage for not less than 28 days before delivery.
3. Units shall be obtained from one manufacturer to insure even color and texture.
4. Provide special units required by the Drawings, including solid, corner, control joint units, lintel, bond beam and jamb units.
5. Provide units that meet equivalent thickness requirements of the building code where required for fire-rated construction.
6. Shapes: Provide shapes indicated and as follows:

a. Provide special shapes for lintels, corners, jambs, sashes, movement joints, headers, bonding, and other special conditions.

b. Provide square-edged units for outside corners, unless otherwise indicated.

7. Integral Water Repellent: Provide units made with integral water repellent.

a. Integral Water Repellent: Liquid polymeric, integral water-repellent admixture that does not reduce flexural bond strength. Units made with integral water repellent, when tested as a wall assembly made with mortar containing integral water-repellent manufacturer's mortar additive according to ASTM E 514, with test period extended to 24 hours, show no visible water or leaks on the back of test specimen.

1) Products:

a) ACM Chemistries; RainBloc.

b) BASF Aktiengesellschaft; Rheopel Plus.

c) Grace Construction Products, W. R. Grace & Co. - Conn.; Dry-Block.

d) Or equal.

8. Air and Moisture Barrier:

a. All exterior faces of new masonry shall receive air and moisture barrier where indicated on the Drawings. Air and moisture barrier shall be a fluid applied, single component silyl-terminated-poly-ether (STPE) seamless elastomeric membrane.

b. Basis of design shall be R-Guard Cat 5 by Prosoco, Inc. applied to a thickness of 12 mils. Surface preparation and installation shall be in accordance with manufacturer’s written requirements.

9. Color and Texture:

a. Integrally Colored Smooth Face CMU: Gray

2.3 REINFORCING, TIES, ANCHORS AND MISCELLANEOUS

A. Wall Reinforcement: See Section 04150, Masonry Accessories.

B. Wall Ties and Anchors: See Section 04150, Masonry Accessories.

C. Compressible filler for use in conjunction with masonry shall be pre-molded, 35 percent compressible, neoprene foam strips complying with ASTM D1056, Grade 2A1. Thickness shall be 3/8-inch or as otherwise shown by width required for joint and wall conditions, allowing 3/4-inch depth for backer rod and sealant where shown.

2.4 MORTAR AND GROUT MATERIALS

A. Portland cement shall conform to ASTM C150 Type I. Masonry cements shall NOT be used.

B. Lime for masonry mortar shall be hydrated, conforming to ASTM C207, Type S.

C. Sand shall be carefully graded and washed natural sands or manufactured granite, marble, quartz or limestone sands meeting ASTM C33, except that gradation may vary to achieve desired finish and texture. Sand for grout shall conform to ASTM C144 or C33 as required.

D. Water shall be free from injurious amounts of oils, acids, alkalis or organic matter, and shall be clean and fresh.

E. Mortar Coloring

1. Pigment for coloring masonry mortar shall be chemically pure, inorganic oxides in compounds suitably prepared for use in masonry mortar as approved.

2. Color shall be approved by the Engineer and Owner and shall match the color on the existing buildings.

F. Integral type waterproofing shall be used in all exterior mortar and shall be metallic stearate type, Hydrocide Powder by Sonneborn Contech; Omicron Mortarproofing by Master Builders Company; Integral Waterpeller by Euclid Chemical; or equal.

G. Non-shrink grout shall be Masterflow 713 as manufactured by the Master Builders Company; Euco N-S by Euclid Chemical Co.; Five Star Grout by U.S. Grout Corporation; or equal. Grout shall attain a 28-day compressive strength of 6800 psi.

2.5 MORTAR AND GROUT MIXES

A. Ingredients shall be accurately measured by volume in boxes especially constructed for the purpose. Measurement by shovel will not be allowed. Measure materials in a damp, loose condition.

B. Portland cement mortar shall conform to ASTM C270, Type S. Provide test data as required to substantiate strength requirements of 3050 psi at 28 days.

C. Grout for constructing CMU lintel blocks, bond beams and for grouting cores in CMU to receive embedded anchors or reinforcing shall conform to ASTM C476, Fine Grout, proportioned by volume: one part Portland cement, zero to 1/10 part lime, and sand equal to 2-1/4 to 3 times the sum of the volumes of cement and lime materials. Strength shall be 3050 psi minimum at 28 days. Mix grout to have a slump of 10 inches plus or minus 1 inch, at time of placement.

D. Non-shrink grout where required shall be mixed as recommended by the manufacturer to give the necessary consistency for placing and to give a minimum compressive strength of 3,000 lbs. per square inch in three days.

E. All other grout shall be one part Portland cement, one part sand.

3 EXECUTION

3.1 MORTAR

A. Mortar shall be machine mixed in an approved type of mixer in which the quantity of water can be accurately and uniformly controlled. The mixing time shall not be less than five minutes, approximately two minutes of which shall be for mixing the dry materials and not less than three minutes for continuing the mixing after the water has been added. Where hydrated lime is used for mortar requiring lime content, there will be allowed the option of using the dry-mix method or first converting the hydrated lime into putty. Where the dry-mix method is employed, the materials for each batch shall be well turned over together until the even color of the mixed, dry materials indicates that the cementitious material has been thoroughly distributed throughout the mass, after which the water shall be gradually added until a thoroughly mixed mortar of the required plasticity is obtained.

B. Mortar boxes shall be cleaned out at the end of each day's work, and all tools shall be kept clean. Mortar that has begun to set shall not be used.

C. Colored mortar for face brickwork shall be uniform in color between batches as approved when in place and set up. Variations in color will be cause for removal and replacement of the affected area as ordered at no additional cost to the Owner.

3.2 MASONRY - INSTALLATION

A. No material that is frozen or covered with frost or snow shall be used in the construction, and no antifreeze salts or ingredients shall be mixed with the mortar. Masonry shall not be laid at temperatures below 40 degrees F, without the approval of the Engineer, and all work shall be done in such a manner as to insure the proper and normal hardening of all mortar. All masonry work shall be so protected and heated that the temperature at the surface will not fall below 50 degrees F for a period of 72 hours after placing. Any completed work found to be affected by freezing shall be taken down and rebuilt at no expense to the Owner.

B. All CMU shall be laid in a full bed of mortar, applied to shells only. Butter the vertical joint of unit already set in the wall and all contact faces of the unit to be set. Each unit shall be placed and shoved against the unit previously laid so as to produce a well compacted vertical mortar joint for the full shell thickness. Units shall set with all cells in a vertical position. The moisture content of the units when laid shall not exceed 35 percent of the total absorption as determined by laboratory test.

C. Maintain tolerances in the erection of masonry as prescribed in ACI 530.1 except single-wythe walls where ordered shall be constructed with one better face in regard to plumb and line. Elsewhere, at single-wythe walls where ordered, provide two good faces by splitting the difference in wythe dimension as approved. The erection tolerances shall be reduced at all locations to a minimum within the parameters of good workmanship and as approved.

D. Masonry Bonding

1. CMU shall be laid in stretcher (running) bond unless otherwise shown.
2. Fill all joints with mortar, dense and neat.

E. Sizes shall be as specified and called for on the Drawings, and where "Soaps" and "Splits" are used, the space between these members and the backup material shall be slushed full of mortar.

F. Joints of all masonry shall be tooled in accordance with the following:

1. Wait until unit mortar is thumbprint hard before tooling joint. This may require as much as three hours in the shade and one hour in the sun in the summertime.
2. The required personnel shall be kept on the job after hours, if necessary, to properly tool joints.
3. Both vertical and horizontal joints shall be maintained uniform in spacing.
4. Tool concave as approved, matching existing.

G. Install all frames required to be set in masonry, set masonry tightly against frames, build in all frame anchors, and fill frames with mortar.

H. Control joints with compressible filler shall be installed at the intersection of masonry walls with structural steel, precast concrete and cast-in-place concrete and elsewhere as detailed on the Drawings. The maximum length, horizontally, between vertical control joints shall be 30 ft (16 ft O.C. at CMU in parapets), but joints shall be located only as directed or shown. Joints shall be equal in width to the standard mortar joint.

I. All masonry slots, chases, or openings required for the proper installation of the work of other Sections shall be constructed as indicated on the Drawings or in accordance with information furnished before the work is started at the points affected. No chase shall cut into any wall constructed of hollow units after it is built, except as directed and approved by the Engineer.

J. Surfaces shall be brushed as work progresses and maintained as clean as it is practicable. Unfinished work shall be raked back where possible, and toothed only where absolutely necessary. Before leaving fresh or unfinished work, walls shall be fully covered and protected against rain and wind and before continuing work previously laid shall be swept clean. The tops of walls or other unfinished work shall be protected against all damage by frost or the elements by means of waterproof paper, tarpaulins, boards or other means approved by the Engineer.

K. Parge all structural steel that will be built into masonry or covered by precast concrete with asphalt emulsion as specified above. Where insulation is required on steel, provide additional daubs of emulsion and embed insulation in emulsion as approved.

L. Build in all miscellaneous items to be set in masonry for which placement is not specifically provided under separate Divisions, including anchor bolts, reglets, lintels, ties, electrical panel boxes, sleeves, vents, grilles, anchors, grounds, and exterior electric conduits and fixtures, and cooperate with other trades whose work is to be coordinated with the work under this Section.

M. All anchorage, attachment, and bonding devices shall be set so as to prevent slippage and shall be completely covered with mortar or grout.

N. All ties and reinforcing for masonry shall be furnished and installed under this Section. Continuous longitudinal wall reinforcing shall be provided in all CMU walls over 4 inches thick. Space at 16-inch O.C. vertically unless shown otherwise and 8-inch O.C. at parapets.

Omit ties and joint reinforcing at joints containing through wall flashing and locate in adjacent open joint.

O. Build in and grout fully all vertical and horizontal wall reinforcing and CMU lintel reinforcement as shown in Drawings.

P. Bed and grout for items coming in contact with masonry where grouting is required, including, but not limited to, door bucks and frames set in masonry. Install all anchor bolts, base plates, and seats in masonry walls, and build in all items required for the completion of the building as they apply to masonry.

3.3 REPAIR, POINTING, AND FINAL CLEANING

A. Exposed masonry shall be protected against staining by wall coverings, and excess mortar shall be wiped off the surface as the work progresses to reduce need for cleaning at completion of the work.

B. Where ordered, remove masonry units which are loose, chipped, broken, stained or otherwise damaged, and units which do not match adjoining units and install new units in fresh mortar or grout, pointed to eliminate, as approved by the Owner, evidence of replacement.

C. Pointing

1. During the tooling of joints, enlarge any voids or holes, except weep holes, and completely fill with mortar matching color as approved by the Engineer and tool to match. Point-up all joints at corners, openings and adjacent work to provide a neat, uniform appearance and properly prepare joints for application of sealants where required.

2. Before final cleaning, repoint all unsatisfactory joints as specified above and as required by the Architect/Engineer.

D. Final Cleaning of Masonry

1. After mortar has thoroughly set and cured (three weeks minimum during the summer; five weeks minimum during the winter), a sample wall area (approximately 20 ft^2), shall be cleaned, with an approved commercial masonry cleaner, diluted and mixed with water as recommended by the manufacturer and as approved. The sample area may be the sample wall panel specified above or an area in the finish work as directed by the Engineer.

2. The Architect/Engineer's acceptance of sample cleaning shall be obtained before proceeding to clean remainder of masonry work. A minimum of one week of dry weather is required to evaluate effectiveness of cleaning and effect on masonry and mortar. Upon acceptance, all face brick masonry shall be cleaned by the same method to the satisfaction of the Architect/Engineer.

E. Acid solutions shall not be used for cleaning CMU. Upon completion of the work, all surfaces of CMU shall be washed with soap powder and warm water, applied with a scrubbing brush, and then rinsed thoroughly with clear water. Other cleaning methods may be ordered to obtain required appearance.

F. Masonry areas not satisfactorily cleanable will be ordered replaced at no extra cost to the Owner.

3.4 FIELD QUALITY CONTROL

A. Testing and Inspecting: Owner will engage special inspectors to perform tests and inspections and prepare reports. Allow inspectors access to scaffolding and work areas, as needed, to perform tests and inspections. Retesting of materials that fail to comply with specified requirements shall be done at Contractor's expense.

B. Inspections: Special inspections shall be done in accordance with Chapter 17 of the "International Building Code".

1. Begin masonry construction only after inspectors have verified proportions of site-prepared mortar.

2. Place grout only after inspectors have verified compliance of grout spaces and of grades, sizes, and locations of reinforcement.
3. Place grout only after inspectors have verified proportions of site-prepared grout.

C. Testing Prior to Construction: One set of tests.

D. Testing Frequency: One set of tests for each 5000 ft^2 of wall area or portion thereof.

E. Concrete Masonry Unit Test: For each type of unit provided, according to ASTM C140 for compressive strength.

F. Mortar Aggregate Ratio Test (Proportion Specification): For each mix provided, according to ASTM C780.

G. Mortar Test (Property Specification): For each mix provided, according to ASTM C780. Test mortar for mortar air content and compressive strength.

H. Grout Test (Compressive Strength): For each mix provided, according to ASTM C1019.

I. Prism Test: For each type of construction provided, according to ASTM C1314 at seven days and at 28 days.

** END OF SECTION **

SECTION 05120
STRUCTURAL STEEL

1 GENERAL

1.1 SCOPE OF WORK

A. Furnish all labor and materials required and install structural steel including bearing plates, columns, beams and miscellaneous shapes and plates required to erect the structural framing as shown on the Drawings and as specified herein.

B. Furnish only anchor bolts with templates to be installed under Division 3. Furnish and install nuts and washers for anchor bolts.

1.2 RELATED WORK

A. Grouting of baseplates is included in Section 03600.

B. Masonry ties to be connected to structural steel are furnished under Section 04200.

C. Miscellaneous metal is included in Section 05500.

D. Field painting, except as specified herein, is included in Division 9.

1.3 SUBMITTALS

A. Submit to the Engineer, in accordance with Section 01300, erection drawings, detailed shop drawings, schedules and data for all structural steel. Approval will be for strength only and shall not relieve the Contractor of responsibility for proper fit of members, of connections not detailed on the Drawings, or for supplying all material required by the Contract Documents. Mark numbers painted on the shop assembled pieces of steel shall be the same mark numbers used on the detailed shop and erection drawings.

B. Product data and installation instructions for Contractor proposed load indicator bolts or direct tension indicators.

C. Certified mill test reports for the structural steel and the bolting materials.

D. Certifications that welders are qualified, in accordance with AWS D1.1, on the shop and field welding procedures to be used.

1.4 REFERENCE STANDARDS

A. American Institute of Steel Construction (AISC)

1. AISC S303 - Code of Standard Practice for Steel Buildings and Bridges
2. AISC 360 – Manual of Steel Construction – 14th Edition.
3. AISC S335 - Specification for Structural Steel Buildings Allowable Stress Design and Plastic Design with Commentary.
4. AISC M016 - Manual of Steel Construction Allowable Stress Design.

B. American Society for Testing and Materials (ASTM)

1. ASTM A36 - Standard Specification for Carbon Structural Steel
2. ASTM A53 - Standard Specification for Pipe, Steel, Black and Hot-Dipped, Zinc-Coated, Welded and Seamless
3. ASTM A123 - Standard Specification for Zinc (Hot-Dipped Galvanized) Coatings on Iron and Steel Products
4. ASTM A153 - Standard Specification for Zinc Coating (Hot-Dip) on Iron and Steel Hardware
5. ASTM A307 - Standard Specification for Carbon Steel Bolts and Studs, 60,000 psi Tensile Strength
6. ASTM A325 - Standard Specification for Structural Bolts, Steel, Heat Treated, 120/105 ksi Minimum Tensile Strength

7. ASTM A490 - Standard Specification for Heat Treated Steel Structural Bolts, 150 ksi Minimum Tensile Strength
8. ASTM A500 - Standard Specification for Cold-Formed Welded and Seamless Carbon Steel Structural Tubing in Rounds and Shapes
9. ASTM A501 - Standard Specification for Hot-Formed Welded and Seamless Carbon Steel Structural Tubing
10. ASTM B695 - Standard Specification for Coatings of Zinc Mechanically Deposited on Iron and Steel.

C. American Welding Society (AWS)

1. AWS A5.1 - Specification for Carbon Steel Electrodes for Shielded Metal Arc Welding.
2. AWS D1.1 - Structural Welding Code Steel.

D. Research Council on Structural Connections of the Engineering Foundation (RCSCEF)

1. Specification for Structural Joints using ASTM A325 or ASTM A490 Bolts.

E. Where reference is made to one of the above standards, the revision in effect at the time of bid opening shall apply.

1.5 QUALITY ASSURANCE

A. Structural steel shall be in accordance with the AISC Standard for Structural Steel Buildings - Allowable Stress Design and Plastic Design and the Code of Standard Practice for Steel Buildings and Bridges, unless otherwise specified herein.

B. Welding shall be in accordance with AWS D1.1 unless otherwise specified herein or in the AISC Standard.

C. High strength bolt materials, accessories and installation shall be in accordance with AISC Specifications for Structural Joints Using ASTM A325 or A490 Bolts.

1.6 SYSTEM DESCRIPTION

A. Design connections not detailed on the Drawings to support loads shown on the Drawings. Calculations for these connections shall be sealed by a registered professional engineer in the State of Georgia.

B. Beam connections not detailed on the Drawings shall be bolted framed beam connections as shown in Table II of the AISC Manual of Steel Construction - Allowable Stress Design, Part 4.

C. Bolted shear connections shall be bearing-type connections unless otherwise shown.

1.7 DELIVERY, STORAGE AND HANDLING

A. Deliver materials promptly so as to cause no delay with other parts of the work.

B. Store materials on skids and not on the ground. Pile and block materials so that they will not become bent or otherwise damaged.

C. Handle materials with cranes or derricks as far as practicable. Do not dump steel off cars or trucks nor handle in any other manner likely to cause damage.

2 PRODUCTS

2.1 MATERIALS

A. Rolled steel wide flange: ASTM A992.

B. Plates, rods, bars, and other structural steel shapes other than wide flange shapes, unless otherwise noted: ASTM A36.

C. Structural tube: ASTM A500, Grade B or ASTM A501.

D. Structural pipe: ASTM A53, Type S, Grade B.

E. Welding electrodes: AWS A5.1, E70XX.

F. High strength steel bolts, nuts and washers: ASTM A325. Where galvanized material is to be connect; use ASTM A325, Type 1, mechanically galvanized to ASTM B695, Class 50, Type II.

G. Anchor bolts: ASTM F1154, Grade 36. Provided standard headed bolts with heavy hex nuts and Grade A washers. Where galvanized anchor bolts are shown or specified, provide all components galvanized in accordance with ASTM F2329.

H. Shop primer: As specified in Section 09900.

I. Galvanizing: Zinc with 0.5 percent (minimum) nickel added.

J. Galvanized surface primer: 95 percent zinc duck, organic vehicle primer.

2.2 FABRICATION

A. Match-mark materials for field assembly. Ream unmatched holes in shop assembly of field connections. Reject and replace with new pieces any piece weakened by reaming to a point where the strength of the joint is impaired.

B. Welding of parts shall be done only where shown on the Drawings or specified herein and by welders and welding operators qualified for the procedures used.

2.3 SURFACE PREPARATION AND SHOP COATINGS

A. Prepare and shop prime paint non-galvanized members as specified in Section 09900. Omit paint within 3 inches of field welds. Do not prime paint faying surfaces of slip critical connections.

3 EXECUTION

3.1 INSTALLATION

A. Furnish and install temporary bracing to provide stability during erection and to prevent distortion or damage to the framing due to wind, seismic, or erection forces. Remove temporary bracing when erection is complete.

B. Use drift pins only to bring members into position and not to enlarge or distort holes.

C. Make all steel to steel connections by high strength bolting except where field welding is shown or specified. Provide not less than two 3/4-in bolts per connection and use not less than 1/4-in thick clip angles.

D. Tighten bolted connections designated as bearing-type connections to the snug tight condition. Tighten all other bolted connections to full pretension by turn-of-nut or calibrated wrench tightening.

E. Field welding shall be done only where shown or specified and only by welders qualified for the procedures used. No welding shall be done when surfaces are wet, exposed to rain or wind, or when welders are exposed to inclement conditions that will hamper good workmanship.

F. Each bolting crew [and welder] shall be assigned an identification mark. This mark shall be made at each completed connection with a paint stick.

G. After erection, prime paint abrasions, field welds and unprimed surfaces, using shop primer except surfaces designated to be unpainted or surfaces in contact with concrete.

H. After erection, prime paint abrasions, field welds, on galvanized surfaces with galvanized surface primer.

3.2 FIELD TESTING

A. Allow the Engineer free access to the work. Notify the Engineer in writing 4 working days in advance of high strength bolting or field welding operations.

B. High strength bolting will be inspected visually. All high strength bolts shall have the turned portion marked with reference to the steel being connected after the nut has been made snug and prior to final tightening. Retighten rejected bolts or remove and provide new

bolts. In cases of disputed bolt installations, the bolts in question shall be checked using a calibrated wrench certified by an independent testing laboratory approved by the Engineer. The certification shall be at the Contractor's expense.

C. Field welding will be inspected visually by AWS certified welding inspectors provided by the Owner.

D. The fact that steel work has been accepted at the shop and mill will not prevent its final rejection at the site, before or after erection, if it is found to be defective.

E. Remove rejected steel work from the site within 10 working days after notification of rejection.

** END OF SECTION **

SECTION 05500
MISCELLANEOUS METALS

1 GENERAL

1.1 DESCRIPTION

Provide all labor, materials and equipment required to install, test and put in operation all miscellaneous metals as indicated on the drawings, as specified herein.

1.2 SUBMITTALS

A. Submit the following in accordance with Section 01300:

1. Manufacturer's literature describing standard items.
2. Shop Drawings showing materials, sizes, finishes, locations, attached hardware and fittings, and details for manufactured items and fabricated metalwork, including field erection details showing cuts, copes, connections, holes, thread fasteners and welds. Indicate welds, both shop and field, by symbols conforming to AWS standards. Indicate coatings or other protection against corrosion.
3. Setting diagrams, erection plans, templates and directions for installation of backing plates, anchors, and other similar items.

2 PRODUCTS

2.1 FABRICATION AND MANUFACTURE

A. GENERAL

1. Materials shall conform to type, size and shapes shown on drawings and conform to the following standard specifications:
   a. Steel Shapes and Plates: ASTM A36.
   b. Steel Pipe: ASTM A53.
   c. Nuts, Bolts, Rivets, Washers, and Anchorage Devices: ASTM A325 and AISC Specification.
   d. Steel Sheets: Cold-rolled or hot-rolled carbon steel, ASTM A366, or ASTM A569.
2. High-Strength, Low Alloy Corrosion-Resistant Steel:
   a. Plates, Shapes, and Bars: ASTM A242 or A588.
   b. Sheet and Strip ASTM A606 Type 4.
3. Stainless Steel:
   a. General: Type (or Grade) 304L or 316L for welding, otherwise Type 304 or 316, as specified.
   b. Shapes and Bars: ASTM A276.
   c. Plate, Sheet, and Strip: ASTM A167.
   d. Tubing: ASTM A269.
   e. Pipe: ASTM A312, Schedule 40S.
4. Aluminum:

Plates, rolled or extruded shapes, sheets or castings conforming (unless otherwise permitted or indicated) to the following Aluminum Association alloy and temper designations:

a. Rolled structural sheets and plates: ASTM B209-6061-T6.

b. Rolled Structural Shapes: ASTM B308-6061.

c. Extruded structural shapes: ASTM B221-6063-T5.

d. Gratings

   (bearing bars): ASTM B211-6061-T6

   (crimp bars): ASTM B211-6061-T5

e. Castings: ASTM B26-214.

f. Sheets: ASTM B209-Alclad 3003-H14 and 3003.

g. Bolts and nuts: Alloy 2024-T4.

h. Pipe railings: ASTM B241-6063-T6.

i. Handrail stanchions: ASTM B241-6063-T6.

5. Fabricate true to shape, size and tolerances as indicated and specified with straight lines, square corners or smooth bends; free from twists, kinks, warps, dents, and other imperfections. Straighten work bent by shearing or punching.

6. Dress exposed edges and ends of metal smooth, with no sharp edges and with corners slightly rounded. Construct connections and joints exposed to weather to exclude water.

7. Provide sufficient quantity and size of anchors for the proper fastening of work.

8. Fabricate details and connection assemblies in accordance with drawings and with projecting corners clipped and filler pieces welded flush.

9. Weld shop connections, bolt or weld field connections, unless otherwise noted or specified.

10. Provide clips, lugs, brackets, straps, plates, bolts, nuts, washers, and similar items, as required for fabrication and erection.

11. Use connections of type and design required by forces to be resisted, and to provide secure fastening.

12. Welding:

    a. Grind exposed edges of welds to a 1/8-inch minimum radius. Grind burrs, jagged edges and surface defects smooth.

    b. Prepare welds and adjacent areas such that there is (1) no undercutting or reverse ridges on weld bead, (2) no weld spatter on or adjacent to weld or any other area to be painted, and (3) no sharp peaks or ridges along weld bead. Grind embedded pieces of electrode or wire flush with adjacent surface of weld bead.

13. Bolting:

    a. Draw up bolts or nuts tight, and deform threads where possible. Use bolts of lengths required so that bolts do not project more than 1/4-inch beyond face of

nut. Do not use washers unless specified. Provide hexagonal head bolts with hexagonal nuts.

b. Provide holes required for the connection of adjacent or adjoining work wherever noted on drawings. Locate holes for bolting equipment to supports to a tolerance of +/- 1/l6-inch of exact dimensions indicated.

14. Fit work together in fabrication shop and deliver complete, or in parts, ready to be set in place.

15. Fabricated Products:

a. Pipe Sleeves in Concrete Construction: Weld standard weight, black steel pipe, with anchors to exterior to accommodate passage of conduits, pipes ducts and similar items.

b. Provide stainless steel stud bolts with heavy aluminum washer and nuts for fastening aluminum pipe railing and handrails. Provide galvanized stud bolts, nuts and washers for fastening steel pipe railing and handrail.

B. ALUMINUM ACCESS HATCHES

1. Lockable single and double leaf hatches shall be constructed of aluminum with a diamond pattern thread or other acceptable raised non-slip surface. They shall be single-leaf or double-leaf with capacity to support 300 pounds per square foot load as shown on the drawings and shall be Halliday Products series S1R or S2R or similar product by U.S.F. Fabrication, Inc., or approved equal.

2. Frames shall be 1/4-inch extruded aluminum formed to an angle frame approximately 3-inches wide, with an anchor flange around the perimeter. Containing frames shall be neatly made. Sufficient anchors shall be attached to the frames for proper anchoring into the concrete. Clear opening must not be reduced.

3. Doors shall be provided with a minimum of two heavy T-316 stainless steel hinges, stainless steel pins, and stainless attaching hardware. Doors shall be equipped with an outside flush lifting handle, stainless steel auto lock hold open arm with vinyl grip release handle.

4. Factory finish for exterior floor doors shall be mill finish with bituminous coating applied to all surfaces in contact with concrete.

5. All hardware shall be stainless steel, Type 316.

6. Unit shall have a lifetime guarantee against defects in material and workmanship.

7. The access hatches shall include a protective grating panel designed to prevent accidental fall into the wet well while the cover is open. Grating panel shall: (1) be designed to maintain 300 PSF rating, (2) be hinged and have a Type 316 stainless steel hold-open latch to lock it in the upright position, (3) have a safety orange powder coat finish, (4) be 6063-T6 aluminum “I” bar, (5) be lockable in the closed position by means of an owner-supplied padlock, and (6) contain Type 316 stainless steel hardware throughout.

C. ALUMINUM HANDRAIL

1. Handrail shall be the product of a company normally engaged in the manufacture of pipe railing. Railing shall be shop assembled in lengths not to exceed 24 feet for field erection.

2. Handrails shall be designed to withstand a 200# concentrated load applied in any direction to the top rail.
3. The manufacturer shall submit calculations to the Engineer for approval. Testing of base casting or base extrusions by an independent lab or manufacturer's lab (if manufacturer's lab meets the requirements of the Aluminum Association) will be an acceptable substitute for calculations. Calculations will be required for approval of all other design aspects.
4. Post spacing shall be a maximum of 6'-0". Posts and railings shall be a minimum of 1 1/2" schedule 40 aluminum pipe, alloy 6105-T5, ASTM B-429 or B-221. The handrail manufacturer shall show that their posts are of adequate strength to meet the loading requirements. If the manufacturer's posts are not of adequate strength, the manufacturer may reduce the post spacing or add reinforcing dowels or do both in order to meet the loading requirements.
5. The handrail shall be made of pipes joined together with component fittings. Samples of all components, bases, toeplate and pipe must be submitted for approval. Components that are glued or pop-riveted at the joints will not be acceptable. All components must be mechanically fastened with stainless steel hardware. Handrail and components shall be "TUFRAIL" as manufactured by Thompson Fabricating Company (Birmingham, AL.) or approved equal.
6. Posts shall not interrupt the continuation of the top rail at any point along the railing, including corners and end terminations (OSHA 1910.23) The top surface of the top railing shall be smooth and shall not be interrupted by a projecting fitting.
7. The midrail at a corner return shall be able to withstand a 200# load without loosening. The manufacturer is to determine this dimension for their system and provide physical tests from a laboratory to confirm compliance.
8. Expansion bolts shall be spaced 10d apart and 5d edge distance for no reduction in pullout strength. A safety factor of 4 shall be used on expansion bolt pullout values published by the manufacturer. Expansion bolts shall be stainless steel type 303 wedge bolts and shall be furnished by the handrail manufacturer.
9. Toeplate shall conform to OSHA standards. Toeplate shall be a minimum of 4"high and shall be an extrusion that attaches to the posts with clamps which allow for expansion and contraction between posts. Toeplate shall be set 1/4" above the walking surface. Toeplates shall be provided on handrails as required by OSHA and/or as shown on the drawings. Toeplate shall be shipped loose, in stock lengths with pre-manufactured corners, for easy field installation.
10. Side mount handrail post stanchions, to concrete. Weld to extruded aluminum brackets. Secure brackets to concrete with four 1/2-inch diameter stainless steel expansion bolts.
11. Anchor handrail top and bottom rails to concrete wall with aluminum square flanges secured to concrete wall with four 3/8-inch diameter stainless steel expansion bolts.
12. Finish shall be Aluminum Association M10C22A41 (215-RI) clear anodized. The pipe shall be plastic wrapped. The plastic wrap shall be removed after erection.
13. Aluminum surfaces in contact with concrete, grout or dissimilar metals will be protected with a mylar isolator, bituminous paint or other approved material.

14. Provide removeable guard chains at openings in aluminum pipe railings. Fabricate from ¼-inch wrought, non-welded aluminum chain having 12 links per foot. Secure chains to aluminum eyes bolted or welded to pipe stanchions at one end of opening. Provide free ends of the chains with hooks formed from 1/4-inch diameter solid aluminum rod for attaching to similar eyes in the pipe stanchion or wall at the opposite end of the opening.

D. ALUMINUM GRATING

1. Where Aluminum grating or stair tread is shown on plans, it shall meet the requirements outlined below.
2. Aluminum grating shall be fabricated of I-shaped bars, alloy 6063-T6, with swaged cross bars spaced on 4" centers. Bearing bars shall be at least 1 1/4" in depth; spacing shall not exceed 13/16" on center. Top surface of bearing bars shall be striated to provide a nonslip surface.
3. Grating shall be designed to support a uniform load of 300 pounds per square foot with a maximum deflection of 1/4". The maximum fiber stress shall not exceed that which is allowed by the Aluminum Association.
4. Standard installation clearances and tolerances shall conform to the requirements of the current Metal Bar Grating Manual published by the National Association of Architectural Metal Manufacturers.
5. Install aluminum clamps or clips to anchor the grating securely to supports. A minimum of 4 fasteners per panel shall be provided, unless otherwise shown on the drawings.
6. Cutouts for circular obstructions are to be at least 2" larger in diameter than the obstruction. Cutouts for all piping 2" in diameter or less shall be made in the field. Band all ends of grating.
7. Aluminum shelf angles shall be anchored to the concrete using stainless steel (type 18-8) wedge anchors.
8. Paint all aluminum surfaces in contact with concrete or dissimilar metals with a shop coat of bituminous paint.
9. Submit loading tables from the manufacturer verifying span, load and deflection for the proposed system components.

E. ALUMINUM LADDERS

1. Rails shall be constructed of 3/8" X 2½” flat aluminum bar and spaced 16" apart.
2. Wall mounted standoffs shall be 3/8" X 2½”flat aluminum bar and welded to the rails at a maximum of 60" on center. The standoffs shall be a minimum of 7" and manufactured to fit flush with the wall.
3. 1-3/8" diameter slip resistant ribbed rungs shall be spaced 12" on center and shall be welded to the inside of each rail.
4. Units shall be as manufactured by Halliday Products, Series L1B; Thompson Fabricating Company, or approved equal.
5. An aluminum ladder safety post shall be provided on the wall side of the fixed ladder below the hatch cover and shall be as manufactured by Halliday Products, series L1E or approved equal. The device shall have a finish and shall be designed with

telescoping tubular section that locks automatically when fully extended. To engage the ladder extension, gasp aluminum post above the top stainless steel channel clamp and pull straight up until the lower stainless steel pin is seated. The unit shall be completely assembled with fasteners for securing to the ladder rung in accordance with the manufacturer's instructions.

F. MISCELLANEOUS ITEMS

Provide items of miscellaneous metalwork not particularly specified, of the shape, size, material and detail indicated and suitable for the purpose intended.

3 EXECUTION

3.1 INSTALLATION

A. Accurately set and properly secure in place. Where bolted connections are used, draw closely together and draw nuts tightly.

B. Locate anchors and anchor bolts and build into connecting work. Insert expansion bolts into drilled holes.

C. ACCESS HATCHES

1. Access hatches shall be installed as shown on the drawings and in accordance with the approved manufacturer’s shop drawings and printed instructions. All doors and covers shall operate freely without binding and shal close without forcing or springing. The exterior of the frames and anchors of those portions coming in contact with the concrete, shall be painted with a heavy coating of asphalt or bituminous material prior to their installation.

2. Protect frames and doors from damage to surface or profile.

D. ALUMINUM PIPE RAILINGS

1. Attach railing rails to face of concrete using aluminum flange and S.S. bolts as indicated.

2. Attach railing posts to edge of concrete using welded aluminum bracket and S.S. bolts as indicated.

E. ALUMINUM GRATINGS AND FRAMES

Anchor aluminum angles to existing concrete walls with S.S. expansion anchors.

F. LADDERS

1. Anchor uprights to wall with angles or bent plates, weld to uprights and use S.S. expansion bolts to wall. Ground smooth all welds.

2. Secure interior ladders to floor slabs with floor flanges.

3. Provide safety post system as indicated.

G. CHAIN HOLDER

Fasten chain holder hook assembly to concrete with S.S. expansion bolts.

3.2 PROTECTION

A. After erection, protect hatches and frames, ladders, and debris baskets from damage due to installation of other work or from lime, acid, cement, or other harmful compounds.

B. Replace damaged hatches and frames, ladders, and debris baskets as determinded by the Engineer with new items and at no additional expense to the Owner.

C. Clean aluminum with mild soap and water, followed by clear water rinse, after erection.

END OF SECTION

SECTION 06100
CARPENTRY WORK

1 GENERAL

1.1 SCOPE OF WORK

A. Furnish all labor, materials, equipment and incidentals required and install all items of rough and finish carpentry work complete as shown on the Drawings and as specified herein.

B. Set in place, all pressed metal frames which are to be built into walls. Install pressed metal frames which are to be installed in concrete openings. Install hollow metal and wood doors and finish hardware furnished under other Sections.

1.2 RELATED WORK

A. Wood forms required for concrete work are included in Division 3.

B. Anchor bolts and other metal appurtenances except as specified herein are included in Division 5.

C. Metal and wood doors and metal frames are furnished under Division 8.

D. Finish hardware is furnished under Division 8.

1.3 SUBMITTALS

A. Submit to the Engineer, in accordance with Section 01300, complete shop drawings showing details of fabrication and erection of all finish carpentry items and material furnished under this Section.

1.4 REFERENCE STANDARDS

A. American Wood Preservers Association (AWPA)

1. AWPA P5 - Waterborne Preservatives

B. National Electrical Manufacturers Association (NEMA)

1. NEMA LD3 - High-Pressure Decorative Laminates

C. Architectural Woodwork Institute (AWI)

D. Where reference is made to one of the above standards, the revision in effect at the time of bid opening shall apply.

1.5 QUALITY ASSURANCE

A. For finish carpentry items, comply with the specified provisions of the "Architectural Woodwork Quality Standards' Illustrated" of the AWI Premium Grade Standards.

2 PRODUCTS

2.1 MATERIALS - ROUGH CARPENTRY

A. All lumber shall be of sound stock, delivered dry and shall be fully protected at all times from injury and dampness. Split, broken, or otherwise damaged pieces will not be allowed in the work.

B. Wood for blocking and nailers shall be seasoned, 19 percent maximum moisture content, Construction Grade quality and of Douglas Fir; Southern Pine or Ponderosa Pine species.

1. Wood members that will contact masonry or concrete shall be vacuum-pressure treated with 100 percent oxide pure chromated copper arsenate meeting AWPA P-5. Minimum net retention of solid preservative shall be 0.40 lbs/cu ft.

2. All treatment shall be performed in accordance with the requirements of AWPA for treating wood. Apply a heavy coat of the same preservative used in treating to all surfaces cut after treatment.

C. Nails, spikes, bolts, nuts and washers where sizes are not indicated or specified, shall be of suitable size and number as approved to securely fasten and hold members in place. Hot dip galvanize after fabrication.

2.2 MATERIALS - FINISH CARPENTRY

A. Core material for plastic laminate work shall be an approved particle board conforming to Commercial Standard C.S. 236 and 3/4-in minimum thickness.

B. Plastic laminate shall comply with NEMA Publication LD3 for General Purpose Type 0.050-in minimum thickness for all exposed work and 0.020-in minimum thickness for back-up sheets as required. Finish shall be matte texture and color shall be a solid light color as selected by the Engineer.

C. Provide stainless steel clad 1-1/16 O.D. clothes poles KV No. 660 or equal in lengths required with chrome plated, inside fitting flanges KV No. 734 or equal. Provide six, two-piece theft-proof coat hangers chrome plated steel, with ball top and matching receptors on rod.

3 EXECUTION

3.1 FABRICATION - FINISH CARPENTRY

A. Before proceeding with fabrication of work required to be fitted to other construction, obtain field measurements and verify dimensions and shop drawings details as required for accurate fit.

B. Employ only mechanics experienced in the fabrication and installation of items to be installed.

C. Casework for plastic laminate finish shall comply with AWI 400, Premium Grade. Provide plastic self-edges. Provide balancing and back-up sheets as required in AWI 400, Premium Grade.

D. All casework shall be fabricated to conform to the intent of the elevations, sections and details shown and shall be in accordance with the approved shop drawings.

3.2 INSTALLATION

A. All rough carpentry shall be accurately cut, fitted and installed as detailed.

B. Anchors shall be installed, where indicated or required, to anchor carpentry or other items securely to masonry or concrete.

C. Forms for structural concrete work shall be as specified under Division 3. Provide all other miscellaneous wood form work as may be required for the completion of the work.

D. Temporary wood doors and cloth or transparent plastic covered frames shall be provided for exterior wall openings during winter construction.

E. Installation of Hollow Metal Doors and Finish Hardware.

1. Doors and finish hardware will be furnished under Division 8 and shall be installed under the work of this Section, except where specifically designated otherwise herein.

2. As soon as the hardware is delivered to the job site, receive, verify and check each set and report to the Engineer any defect or shortage. Give notice to the hardware supplier for all such items which may be defective or missing. Provide a receipt to the hardware supplier for all such items as are found to be correct.

3. Finish hardware, after checking, shall be the responsibility of the Contractor until it is installed and the project is accepted in its entirety by the Owner.

4. Hardware shall be attached and placed by skilled mechanics in accordance with approved hardware templates provided with the hardware and shall be accurately fitted

and adjusted. Lever handles shall be kept covered with heavy cloth and other hardware shall be protected from damage until final acceptance of the entire project by the Owner.

5. Set each edge and joint of threshold in a seal strip of polyurethane sealant. Grout remainder of threshold in mortar.
6. Adjust and check each operating item of hardware and each door, to ensure proper operation or function of every unit. Lubricate moving parts with type lubrication recommended by manufacturer (graphite-type if no other recommended). Replace units which cannot be adjusted and lubricated to operate freely and smoothly as intended for the application made.
7. Wherever hardware installation is made more than 1 month prior to acceptance or occupancy of a space or area, return to the work during the week prior to acceptance or occupancy and make a final check and adjustment of all hardware items in such space or area. Clean and relubricate operating items as necessary to restore proper function and finish of hardware and doors. Adjust door control devices to compensate for final operation of heating and ventilating equipment.

F. Install finish carpentry casework in a manner consistent with quality of specified grade to be plumb, level, true and straight with no distortions. Shim as required using concealed shims. Secure to substrate with concealed fasteners where possible and blind nailing as required for complete installation. Scribe and cut for accurate fit to other finished work as required.

G. After completion of casework, clean exposed exterior and interior surfaces, remove and refinish damaged or soiled areas of finish and repair damaged or defective work or replace as directed to the satisfaction of the Engineer.

H. Protect finished surfaces with heavy-duty canvas or polyethylene sheets. Secure loose components from damage during delivery. If such items are to be delivered separately from main body of casework, wrap each piece separately to protect finish and clearly mark to show proper location in completed casework.

** END OF SECTION **

SECTION 07412
STANDING-SEAM METAL ROOF PANELS

1 GENERAL

1.1 SCOPE OF WORK

A. Furnish all labor, materials, equipment and incidentals required and install intumescent paints complete as shown on the drawings and as specified herein.

B. Section includes standing-seam metal roof panels.

1.2 RELATED WORK

A. Metal panels used in horizontal soffit applications are included in Section.

B. Snow guards for prefabricated devices designed to hold snow on the roof surface, allowing it to melt and drain off slowly are included in Section.

1.3 SUBMITTALS

A. Submit in accordance with Section 01300.

B. Product Data: For each type of product.

1. Include construction details, material descriptions, dimensions of individual components and profiles, and finishes for each type of panel and accessory.

C. Shop Drawings:

1. Include fabrication and installation layouts of metal panels; details of edge conditions, joints, panel profiles, corners, anchorages, attachment system, trim, flashings, closures, and accessories; and special details.

2. Accessories: Include details of the flashing, trim, and anchorage systems, at a scale of not less than 1-1/2 inches per 12 inches (1:10).

D. Samples for Initial Selection: For each type of metal panel indicated with factory-applied color finishes.

1. Include similar Samples of trim and accessories involving color selection.

E. Samples for Verification: For each type of exposed finish required, prepared on Samples of size indicated below.

1. Metal Panels: 12 inches (305 mm) long by actual panel width. Include clips, fasteners, closures, and other metal panel accessories.

F. Qualification Data: For Installer.

G. Product Test Reports: For each product, for tests performed by a qualified testing agency.

H. Field quality-control reports.

I. Sample Warranties: For special warranties.

J. Maintenance Data: For metal panels to include in maintenance manuals.

1.4 REFERENCED STANDARDS

A. American Architectural Manufacturers Association

1. AAMA 611 - Voluntary Specification for Anodized Architectural Aluminum

2. AAMA 620 - Voluntary Specification for High Performance Organic Coatings on Coil Coated Architectural Aluminum Substrates

3. AAMA 621 - Voluntary Specification for High Performance Organic Coatings on Coil Coated Architectural Hot Dipped Galvanized (HDG) and Zinc-Aluminum Coated Steel Substrates

B. ASTM International

1. ASTM A 240/A 240M - Specification for Chromium and Chromium-Nickel Stainless Steel Plate, Sheet, and Strip for Pressure Vessels and for General Applications
2. ASTM A 653/A 653M - Specification for Steel Sheet, Zinc-Coated (Galvanized) or Zinc-Iron Alloy-Coated (Galvannealed) by the Hot-Dip Process
3. ASTM A 755/A 755M - Specification for Steel Sheet, Metallic Coated by the Hot-Dip Process and Prepainted by the Coil-Coating Process for Exterior Exposed Building Products
4. ASTM A 792/A 792M - Specification for Steel Sheet, 55 Percent Aluminum-Zinc Alloy-Coated by the Hot-Dip Process
5. ASTM B 209 - Specification for Aluminum and Aluminum-Alloy Sheet and Plate
6. ASTM B 209M - Specification for Aluminum and Aluminum-Alloy Sheet and Plate [Metric]

1.5 ASTM B 370 - SPECIFICATION FOR COPPER SHEET AND STRIP FOR BUILDING CONSTRUCTION

1. ASTM B 882 - Specification for Pre-Patented Copper for Architectural Applications
2. ASTM C 645 - Specification for Nonstructural Steel Framing Members
3. ASTM C 754 - Specification for Installation of Steel Framing Members to Receive Screw-Attached Gypsum Panel Products
4. ASTM C 920 - Specification for Elastomeric Joint Sealants
5. ASTM C 1311 - Specification for Solvent Release Sealants
6. ASTM D 226/D 226M - Specification for Asphalt-Saturated Organic Felt Used in Roofing and Waterproofing
7. ASTM D 1970 - Specification for Self-Adhering Polymer Modified Bituminous Sheet Materials Used as Steep Roofing Underlayment for Ice Dam Protection
8. ASTM D 2244 - Practice for Calculation of Color Differences from Instrumentally Measured Color Coordinates
9. ASTM D 4214 - Test Methods for Evaluating the Degree of Chalking of Exterior Paint Films
10. ASTM E 283 - Test Method for Determining Rate of Air Leakage through Exterior Windows, Curtain Walls, and Doors under Specified Pressure Differences across the Specimen
11. ASTM E 331 - Test Method for Water Penetration of Exterior Windows, Skylights, Doors, and Curtain Walls by Uniform Static Air Pressure Difference
12. ASTM E 1514 - Specification for Structural Standing Seam Steel Roof Panel Systems
13. ASTM E 1592 - Test Method for Structural Performance of Sheet Metal Roof and Siding Systems by Uniform Static Air Pressure Difference
14. ASTM E 1637 - Specification for Structural Standing Seam Aluminum Roof Panel Systems
15. ASTM E 1646 - Test Method for Water Penetration of Exterior Metal Roof Panel Systems by Uniform Static Air Pressure Difference
16. ASTM E 1680 - Test Method for Rate of Air Leakage through Exterior Metal Roof Panel Systems
17. ASTM E 1980 - Practice for Calculating Solar Reflectance Index of Horizontal and Low-Sloped Opaque Surfaces
18. ASTM E 2140 - Test Method for Weather Penetration of Metal Roof Panel Systems by Static Water Pressure Head

B. Cool Roof Rating Council

1. CRRC-1 - CRRC Product Rating Program

C. FM Global

1. FMG 4471 - Approval Standard, Class I Panel Roofs
2. Approval Guide.

D. Sheet Metal and Air Conditioning Contractors' National Association

1. Architectural Sheet Metal Manual.

E. Underwriters Laboratories Inc.

1. UL 580 - Tests for Uplift Resistance of Roof Assemblies

F. Where reference is made to one of the above standards, the revision in effect at the time of bid opening shall apply.

1.6 QUALITY ASSURANCE

A. Installer Qualifications: An entity that employs installers and supervisors who are trained and approved by manufacturer.

B. UL-Certified, Portable Roll-Forming Equipment: UL-certified, portable roll-forming equipment capable of producing metal panels warranted by manufacturer to be the same as factory-formed products. Maintain UL certification of portable roll-forming equipment for duration of work.

1.7 DELIVERY, STORAGE AND HANDLING

A. Deliver components, metal panels, and other manufactured items so as not to be damaged or deformed. Package metal panels for protection during transportation and handling.

B. Unload, store, and erect metal panels in a manner to prevent bending, warping, twisting, and surface damage.

C. Stack metal panels horizontally on platforms or pallets, covered with suitable weathertight and ventilated covering. Store metal panels to ensure dryness, with positive slope for drainage of water. Do not store metal panels in contact with other materials that might cause staining,
denting, or other surface damage.

D. Retain strippable protective covering on metal panels during installation.

E. Copper Panels: Wear gloves when handling to prevent fingerprints and soiling of surface.

1.8 FIELD CONDITIONS

A. Weather Limitations: Proceed with installation only when existing and forecasted weather conditions permit assembly of metal panels to be performed according to manufacturers' written instructions and warranty requirements.

1.9 COORDINATION

A. Coordinate sizes and locations of roof curbs, equipment supports, and roof penetrations with actual equipment provided.

B. Coordinate metal panel installation with rain drainage work, flashing, trim, construction of soffits, and other adjoining work to provide a leakproof, secure, and noncorrosive installation.

1.10 WARRANTY

A. Special Warranty: Manufacturer's standard form in which manufacturer agrees to repair or replace components of metal panel systems that fail in materials or workmanship within specified warranty period.

1. Failures include, but are not limited to, the following:

a. Structural failures including rupturing, cracking, or puncturing.

b. Deterioration of metals and other materials beyond normal weathering.

2. Warranty Period: Two years from date of Substantial Completion.

B. Special Warranty on Panel Finishes: Manufacturer's standard form in which manufacturer agrees to repair finish or replace metal panels that show evidence of deterioration of factory-applied finishes within specified warranty period.

1. Exposed Panel Finish: Deterioration includes, but is not limited to, the following:

a. Color fading more than 5 Hunter units when tested according to ASTM D 2244.

b. Chalking in excess of a No. 8 rating when tested according to ASTM D 4214.

c. Cracking, checking, peeling, or failure of paint to adhere to bare metal.

2. Finish Warranty Period: 20 years from date of Substantial Completion.

C. Special Weathertightness Warranty: Manufacturer's standard form in which manufacturer agrees to repair or replace standing-seam metal roof panel assemblies that fail to remain weathertight, including leaks, within specified warranty period.

1. Warranty Period: 20 years from date of Substantial Completion.

2 PRODUCTS

2.1 PERFORMANCE REQUIREMENTS

A. Structural Performance: Provide metal panel systems capable of withstanding the effects of the following loads, based on testing according to ASTM E 1592:

1. Wind Loads: As indicated on Drawings.

2. Other Design Loads: As indicated on Drawings.

3. Deflection Limits: For wind loads, no greater than 1/240 of the span.

B. Water Penetration under Static Pressure: No water penetration when tested according to ASTM E 1646 at the following test-pressure difference:

1. Test-Pressure Difference: 6.24 lbf/sq. ft. (300 Pa).

C. Hydrostatic-Head Resistance: No water penetration when tested according to ASTM E 2140.

D. Wind-Uplift Resistance: Provide metal roof panel assemblies that comply with UL 580 for wind-uplift-resistance class indicated.

1. Uplift Rating: UL 90.

E. FM Global Listing: Provide metal roof panels and component materials that comply with requirements in FM Global 4471 as part of a panel roofing system and that are listed in FM Global’ s "Approval Guide" for Class 1 or noncombustible construction, as applicable. Identify materials with FM Global markings.

1. Fire/Windstorm Classification: Class 1A-105.

F. Thermal Movements: Allow for thermal movements from ambient and surface temperature changes by preventing buckling, opening of joints, overstressing of components, failure of joint sealants, failure of connections, and other detrimental effects. Base calculations on surface temperatures of materials due to both solar heat gain and nighttime-sky heat loss.

1. Temperature Change (Range): 120 deg F (67 deg C), ambient; 180 deg F (100 deg C), material surfaces.

2.2 STANDING-SEAM METAL ROOF PANELS

A. General: Provide factory-formed metal roof panels designed to be installed by lapping and interconnecting raised side edges of adjacent panels with joint type indicated and mechanically attaching panels to supports using concealed clips in side laps. Include clips, cleats, pressure plates, and accessories required for weathertight installation.

1. Steel Panel Systems: Unless more stringent requirements are indicated, comply with ASTM E 1514.

   Vertical-Rib, Seamed-Joint, Standing-Seam Metal Roof Panels: Formed with vertical ribs at panel edges and a flat pan between ribs; designed for sequential installation by mechanically attaching panels to supports using concealed clips located under one side of panels, engaging opposite edge of adjacent panels, and mechanically seaming panels together.

2. Basis-of-Design Product: Subject to compliance with requirements, provide 238T Symmetrical Panel by Architectural Components or comparable product by one of the following:

   a. Advanced Architectural Products.
   b. AEP Span; a BlueScope Steel company.
   c. Architectural Building Components.
   d. Architectural Metal Systems; a Nucor company.
   e. ATAS International, Inc.
   f. Berridge Manufacturing Company.
   g. CENTRIA Architectural Systems.
   h. Dimensional Metals, Inc.
   i. Englert, Inc.
   j. Fabral.
   k. Firestone Metal Products, LLC.
   l. Flexospan Steel Buildings, Inc.
   m. Garland Company, Inc. (The)
   n. IMETCO.
   o. MBCI; a division of NCI Building Systems, L.P.
   p. McElroy Metal, Inc.
   q. Merchant & Evans.
   r. Metal-Fab Manufacturing, LLC.
   s. Metal Sales Manufacturing Corporation.
   t. Morin; a Kingspan Group company.
   u. Petersen Aluminum Corporation.
   v. Ryerson, Inc.
   w. Ultra Seam, Inc.
   x. Union Corrugating Company
   y. Or equal.

3. Metallic-Coated Steel Sheet: Zinc-coated (galvanized) steel sheet complying with ASTM A 653/A 653M, G90 (Z275) coating designation, or aluminum-zinc alloy-coated steel sheet complying with ASTM A 792/A 792M, Class AZ50 (Class AZM150) coating designation; structural quality. Prepainted by the coil-coating process to comply with ASTM A 755/A 755M.

   a. Nominal Thickness: 0.028 inch (0.71 mm).
   b. Exterior Finish: Two coat coil applied, baked-on full-strength (70% resin, PVF2) fluorocarbon coating consisting of a nominal 0.25 mil dry film thickness primer, and a nominal dry film thickness of 0.7 - 0.8 mil color coat for a total 0.9 to 1.1 mil total

system dry film thickness. Finish to be selected from manufacturer's standard color selection.<<CONFIRM>> The back side of the material should be 0.25 mil primer and 0.25 mil polyester wash coat.

c. Color: As selected by Engineer from manufacturer's full range <Insert color>.

4. Clips: One-piece fixed to accommodate thermal movement.

a. Material: 0.064-inch- (1.63-mm-) nominal thickness, zinc-coated (galvanized) or aluminum-zinc alloy-coated steel sheet.

5. Joint Type: As standard with manufacturer.

6. Panel Coverage: 16 inches (406 mm).

7. Panel Height: 2.375 inches (60.325 mm).

2.3 UNDERLAYMENT MATERIALS

A. Self-Adhering, High-Temperature Underlayment: Provide self-adhering, cold-applied, sheet underlayment, a minimum of 30 mils (0.76 mm) thick, consisting of slip-resistant, polyethylene-film top surface laminated to a layer of butyl or SBS-modified asphalt adhesive, with release-paper backing. Provide primer when recommended by underlayment manufacturer.

1. Thermal Stability: Stable after testing at 240 deg F (116 deg C); ASTM D 1970.

2. Low-Temperature Flexibility: Passes after testing at minus 20 deg F (29 deg C); ASTM D 1970.

3. Products: Provide one of the following:

a. Carlisle Residential, a division of Carlisle Construction Materials; WIP 300HT.

b. Grace Construction Products, a unit of W. R. Grace & Co.

c. Henry Company; Blueskin PE200 HT.

d. Kirsch Building Products, LLC; Sharkskin Ultra SA.

e. Metal-Fab Manufacturing, LLC; MetShield.

f. Owens Corning; WeatherLock Metal High Temperature Underlayment.

g. Or equal.

B. Slip Sheet: Manufacturer's recommended slip sheet, of type required for application.

2.4 MISCELLANEOUS MATERIALS

A. Miscellaneous Metal Subframing and Furring: ASTM C 645; cold-formed, metallic-coated steel sheet, ASTM A 653/A 653M, G90 (Z275 hot-dip galvanized) coating designation or ASTM A 792/A 792M, Class AZ50 (Class AZM150) coating designation unless otherwise indicated. Provide manufacturer's standard sections as required for support and alignment of metal panel system.

B. Panel Accessories: Provide components required for a complete, weathertight panel system including trim, copings, fasciae, mullions, sills, corner units, clips, flashings, sealants, gaskets, fillers, closure strips, and similar items. Match material and finish of metal panels unless
otherwise indicated.

1. Closures: Provide closures at eaves and ridges, fabricated of same metal as metal panels.

2. Backing Plates: Provide metal backing plates at panel end splices, fabricated from material recommended by manufacturer.

3. Closure Strips: Closed-cell, expanded, cellular, rubber or crosslinked, polyolefin-foam or closed-cell laminated polyethylene; minimum 1-inch- (25-mm-) thick, flexible closure strips; cut or premolded to match metal panel profile. Provide closure strips where indicated or necessary to ensure weathertight construction.

C. Flashing and Trim: Provide flashing and trim formed from same material as metal panels as required to seal against weather and to provide finished appearance. Locations include, but are not limited to, eaves, rakes, corners, bases, framed openings, ridges, fasciae, and fillers. Finish flashing and trim with same finish system as adjacent metal panels.

D. Gutters: Formed from same material as roof panels, complete with end pieces, outlet tubes, and other special pieces as required. Fabricate in minimum 96-inch (2400-mm) long sections, of size and metal thickness according to SMACNA's "Architectural Sheet Metal Manual." Furnish gutter supports spaced a maximum of 24 inches (914 mm) o.c., fabricated from same metal as gutters. Provide wire ball strainers of compatible metal at outlets. Finish gutters to match metal roof panels.

E. Downspouts: Formed from same material as roof panels. Fabricate in 10-foot long sections, complete with formed elbows and offsets, of size and metal thickness according to SMACNA's "Architectural Sheet Metal Manual." Finish downspouts to match gutters.

F. Roof Curbs: Fabricated from same material as roof panels, 0.048-inch (1.2-mm) nominal thickness; with bottom of skirt profiled to match roof panel profiles and with welded top box and integral full-length cricket. Fabricate curb subframing of 0.060-inch (1.52-mm) nominal thickness, angle-, C-, or Z-shaped steel sheet. Fabricate curb and subframing to withstand indicated loads of size and height indicated. Finish roof curbs to match metal roof panels.

1. Insulate roof curb with 1-inch (25-mm) thick, rigid insulation.

G. Panel Fasteners: Self-tapping screws designed to withstand design loads.

H. Panel Sealants: Provide sealant type recommended by manufacturer that are compatible with panel materials, are nonstaining, and do not damage panel finish.

1. Sealant Tape: Pressure-sensitive, 100 percent solids, gray polyisobutylene compound sealant tape with release-paper backing. Provide permanently elastic, nonsag, nontoxic, nonstaining tape 1/2 inch (13 mm) wide and 1/8 inch (3 mm) thick.

2. Joint Sealant: ASTM C 920; elastomeric polyurethane or silicone sealant; of type, grade, class, and use classifications required to seal joints in metal panels and remain weathertight; and as recommended in writing by metal panel manufacturer.

3. Butyl-Rubber-Based, Solvent-Release Sealant: ASTM C 1311.

2.5 FABRICATION

A. General: Fabricate and finish metal panels and accessories at the factory, by manufacturer's standard procedures and processes, as necessary to fulfill indicated performance requirements demonstrated by laboratory testing. Comply with indicated profiles and with dimensional and structural requirements.

B. Provide panel profile, including major ribs and intermediate stiffening ribs, if any, for full length of panel.

C. Fabricate metal panel joints with factory-installed captive gaskets or separator strips that provide a weathertight seal and prevent metal-to-metal contact, and that minimize noise from movements.

D. Sheet Metal Flashing and Trim: Fabricate flashing and trim to comply with manufacturer's recommendations and recommendations in SMACNA's "Architectural Sheet Metal Manual" that apply to design, dimensions, metal, and other characteristics of item indicated.

1. Form exposed sheet metal accessories that are without excessive oil canning, buckling, and tool marks and that are true to line and levels indicated, with exposed edges folded back to form hems.

2. Seams for Aluminum: Fabricate nonmoving seams with flat-lock seams. Form seams and seal with epoxy seam sealer. Rivet joints for additional strength.

3. Seams for Other Than Aluminum: Fabricate nonmoving seams in accessories with flat-lock seams. Tin edges to be seamed, form seams, and solder.

4. Sealed Joints: Form non-expansion, but movable, joints in metal to accommodate sealant and to comply with SMACNA standards.
5. Conceal fasteners and expansion provisions where possible. Exposed fasteners are not allowed on faces of accessories exposed to view.
6. Fabricate cleats and attachment devices from same material as accessory being anchored or from compatible, noncorrosive metal recommended in writing by metal panel manufacturer.
    a. Size: As recommended by SMACNA's "Architectural Sheet Metal Manual" or metal panel manufacturer for application, but not less than thickness of metal being secured.

2.6 FINISHES

A. Protect mechanical and painted finishes on exposed surfaces from damage by applying a strippable, temporary protective covering before shipping.

B. Appearance of Finished Work: Variations in appearance of abutting or adjacent pieces are acceptable if they are within one-half of the range of approved Samples. Noticeable variations in same piece are unacceptable. Variations in appearance of other components are acceptable if they are within the range of approved Samples and are assembled or installed to minimize contrast.

C. Steel Panels and Accessories:
1. Two-Coat Fluoropolymer: AAMA 621. Fluoropolymer finish containing not less than 70 percent PVDF resin by weight in color coat. Prepare, pretreat, and apply coating to exposed metal surfaces to comply with coating and resin manufacturers' written instructions. Color shall be chosen by Owner.
2. Concealed Finish: Apply pretreatment and manufacturer's standard white or light-colored acrylic or polyester backer finish consisting of prime coat and wash coat with a minimum total dry film thickness of 0.5 mil (0.013 mm).

3 EXECUTION

3.1 EXAMINATION

A. Examine substrates, areas, and conditions, with Installer present, for compliance with requirements for installation tolerances, metal panel supports, and other conditions affecting performance of the Work.
1. Examine primary and secondary roof framing to verify that rafters, purlins, angles, channels, and other structural panel support members and anchorages have been installed within alignment tolerances required by metal roof panel manufacturer.
2. Examine solid roof sheathing to verify that sheathing joints are supported by framing or blocking and that installation is within flatness tolerances required by metal roof panel manufacturer.
    a. Verify that air- or water-resistive barriers have been installed over sheathing or backing substrate to prevent air infiltration or water penetration.

B. Examine roughing-in for components and systems penetrating metal panels to verify actual locations of penetrations relative to seam locations of metal panels before installation.

C. Proceed with installation only after unsatisfactory conditions have been corrected.

3.2 PREPARATION

A. Miscellaneous Supports: Install subframing, furring, and other miscellaneous panel support members and anchorages according to ASTM C 754 and metal panel manufacturer's written recommendations.

3.3 UNDERLAYMENT INSTALLATION

A. Self-Adhering Sheet Underlayment: Apply primer if required by manufacturer. Comply with temperature restrictions of underlayment manufacturer for installation. Apply at locations indicated [below] [on Drawings], wrinkle free, in shingle fashion to shed water, and with end laps of not less than 6 inches (152 mm) staggered 24 inches (610 mm) between courses. Overlap side edges not less than 3-1/2 inches (90 mm).[Extend underlayment into gutter trough.] Roll laps with roller. Cover underlayment within 14 days.

1. Apply over the entire roof surface.

B. Slip Sheet: Apply slip sheet over underlayment before installing metal roof panels.

3.4 METAL PANEL INSTALLATION

A. General: Install metal panels according to manufacturer's written instructions in orientation, sizes, and locations indicated. Install panels perpendicular to supports unless otherwise indicated. Anchor metal panels and other components of the Work securely in place, with provisions for thermal and structural movement.

1. Shim or otherwise plumb substrates receiving metal panels.
2. Flash and seal metal panels at perimeter of all openings. Fasten with self-tapping screws. Do not begin installation until air- or water-resistive barriers and flashings that will be concealed by metal panels are installed.
3. Install screw fasteners in predrilled holes.
4. Locate and space fastenings in uniform vertical and horizontal alignment.
5. Install flashing and trim as metal panel work proceeds.
6. Locate panel splices over, but not attached to, structural supports. Stagger panel splices and end laps to avoid a four-panel lap splice condition.
7. Align bottoms of metal panels and fasten with blind rivets, bolts, or self-tapping screws. Fasten flashings and trim around openings and similar elements with self-tapping screws.
8. Provide weathertight escutcheons for pipe- and conduit-penetrating panels.

B. Fasteners:

1. Steel Panels: Use stainless-steel fasteners for surfaces exposed to the exterior; use galvanized-steel fasteners for surfaces exposed to the interior.

C. Anchor Clips: Anchor metal roof panels and other components of the Work securely in place, using manufacturer's approved fasteners according to manufacturers' written instructions.

D. Metal Protection: Where dissimilar metals contact each other or corrosive substrates, protect against galvanic action as recommended in writing by metal panel manufacturer.

E. Standing-Seam Metal Roof Panel Installation: Fasten metal roof panels to supports with concealed clips at each standing-seam joint at location, spacing, and with fasteners recommended in writing by manufacturer.

1. Install clips to supports with self-tapping fasteners.
2. Install pressure plates at locations indicated in manufacturer's written installation instructions.
3. Seamed Joint: Crimp standing seams with manufacturer-approved, motorized seamer tool so clip, metal roof panel, and factory-applied sealant are completely engaged.
4. Watertight Installation:

a. Apply a continuous ribbon of sealant or tape to seal joints of metal panels, using sealant or tape as recommend in writing by manufacturer as needed to make panels watertight.

b. Provide sealant or tape between panels and protruding equipment, vents, and accessories.

c. At panel splices, nest panels with minimum 6-inch (152-mm) end lap, sealed with sealant and fastened together by interlocking clamping plates.

F. Accessory Installation: Install accessories with positive anchorage to building and weathertight mounting, and provide for thermal expansion. Coordinate installation with flashings and other components.

1. Install components required for a complete metal panel system including trim, copings, corners, seam covers, flashings, sealants, gaskets, fillers, closure strips, and similar items. Provide types indicated by metal roof panel manufacturers; or, if not indicated, types recommended by metal roof panel manufacturer.

G. Flashing and Trim: Comply with performance requirements, manufacturer's written installation instructions, and SMACNA's "Architectural Sheet Metal Manual." Provide concealed fasteners where possible, and set units true to line and level as indicated. Install work with laps, joints, and seams that will be permanently watertight and weather resistant.

1. Install exposed flashing and trim that is without buckling and tool marks, and that is true to line and levels indicated, with exposed edges folded back to form hems. Install sheet metal flashing and trim to fit substrates and achieve waterproof and weather-resistant performance.

2. Expansion Provisions: Provide for thermal expansion of exposed flashing and trim. Space movement joints at a maximum of 10 feet (3 m) with no joints allowed within 24 inches (610 mm) of corner or intersection. Where lapped expansion provisions cannot be used or would not be sufficiently weather resistant and waterproof, form expansion joints of intermeshing hooked flanges, not less than 1 inch (25 mm) deep, filled with mastic sealant (concealed within joints).

H. Gutters: Join sections with riveted and soldered or lapped and sealed joints. Attach gutters to eave with gutter hangers spaced not more than 36 inches (914 mm) o.c. using manufacturer's standard fasteners. Provide end closures and seal watertight with sealant. Provide for thermal expansion.

I. Downspouts: Join sections with telescoping joints. Provide fasteners designed to hold downspouts securely 1 inch (25 mm) away from walls; locate fasteners at top and bottom and at approximately 60 inches (1524 mm) o.c. in between.

1. Provide elbows at base of downspouts to direct water away from building.

J. Roof Curbs: Install flashing around bases where they meet metal roof panels.

K. Pipe Flashing: Form flashing around pipe penetration and metal roof panels. Fasten and seal to metal roof panels as recommended by manufacturer.

3.5 ERECTION TOLERANCES

A. Installation Tolerances: Shim and align metal panel units within installed tolerance of 1/4 inch in 20 feet (6 mm in 6 m) on slope and location lines as indicated and within 1/8-inch (3-mm) offset of adjoining faces and of alignment of matching profiles.

3.6 FIELD QUALITY CONTROL

A. Manufacturer's Field Service: Engage a factory-authorized service representative to test and inspect metal roof panel installation, including accessories. Report results in writing.

B. Remove and replace applications of metal roof panels where tests and inspections indicate that they do not comply with specified requirements.

C. Additional tests and inspections, at Contractor's expense, are performed to determine compliance of replaced or additional work with specified requirements.

D. Prepare test and inspection reports.

3.7 CLEANING AND PROTECTION

A. Remove temporary protective coverings and strippable films, if any, as metal panels are installed, unless otherwise indicated in manufacturer's written installation instructions. On completion of metal panel installation, clean finished surfaces as recommended by metal panel manufacturer. Maintain in a clean condition during construction.

B. Replace metal panels that have been damaged or have deteriorated beyond successful repair by finish touchup or similar minor repair procedures.

** END OF SECTION **

SECTION 07620
SHEET METAL FLASHING AND TRIM

1 GENERAL

1.1 SUBMITTALS

A. Product Data, Shop Drawings, and Samples for each item specified.

2 PRODUCTS

2.1 MANUFACTURERS

A. Subject to compliance with requirements, provide products by one of the following:

1. Through-Wall Flashing:
   a. Cheney Flashing (Dovetail); Cheney Flashing Company, Inc.
   b. Cheney Flashing (Sawtooth); Cheney Flashing Company, Inc.
   c. Keystone Three-Way Interlocking Thruwall Flashing; Keystone Flashing Co.
2. Reglets:
   a. Fry Reglet Corporation.
   b. Hickman: W.P. Hickman Co.
   c. Keystone Flashing Company.

2.2 MATERIALS

A. Copper: ASTM B370; temper H00, cold rolled except where temper 060 is required for forming; not less than 16 oz/sq ft (0.55 mm thick), unless otherwise indicated.

B. Aluminum Sheet: ASTM B209 (ASTM B209M), 3003-H14, mill finish, minimum thickness of 0.040-in (1.0-mm), unless otherwise indicated.

C. Stainless-Steel Sheet: ASTM A167, Type 304, soft annealed, with No. 2D finish, except where harder temper is required for forming or performance; minimum 0.0187-in (0.5-mm) thick, unless otherwise indicated.

D. Galvanized Steel Sheet: ASTM A526, G90 (ASTM A526M, Z275), commercial quality, or ASTM A527, G90 (ASTM A527M, Z275), lock-forming quality, hot-dip galvanized, mill phosphatized where indicated for painting; not less than 0.0396-in (1.0-mm) thick, unless otherwise indicated.

E. Lead Sheet: ASTM B749, Type L51121, copper-bearing lead sheet, minimum thickness of 0.0625-inch (1.6-mm) except not less than 0.0937-in (2.4-mm) thick for applications where burning (welding) is involved.

F. Concealed Through-Wall Flashing: 0.0156-in (0.4-mm) thick stainless steel.

G. Reglets: Profile indicated; 0.0187-in (0.5-mm) thick stainless steel.

H. Miscellaneous Materials and Accessories: As follows:

1. Solder: ASTM B32, Grade Sn50.
2. Solder for Stainless Steel: ASTM B32, Grade Sn60.
3. Fasteners: Noncorrosive metal. Match finish of exposed heads with material being fastened.
4. Asphalt Mastic: SSPC-Paint 12, asbestos free, solvent type.
5. Roofing Cement: ASTM D4586, Type I, asbestos free, asphalt based.
6. Mastic Sealant: Polyisobutylene; nonhardening, nonskinning, nondrying, nonmigrating sealant.

7. Elastomeric Sealant: As specified in Division 7 Section "Joint Sealants."
8. Epoxy Seam Sealer: 2-part, noncorrosive, aluminum seam-cementing compound.
9. Adhesives: Type recommended for waterproof and weather-resistant seaming and adhesive.
10. Clips, Straps, Anchoring Devices, and Similar Accessories: Compatible with material being installed.

2.3 FABRICATION

A. Fabricate sheet metal flashing and trim to comply with recommendations of SMACNA's "Architectural Sheet Metal Manual" that apply to the design, dimensions, metal and other characteristics of the item indicated.

1. Gutters: 0.040-in (1.0-mm) thick aluminum.
2. Downspouts: 0.024-in (0.6-mm) thick aluminum.
3. Conductor Heads: 0.032-in (0.8-mm) thick aluminum.
4. Splash Pans: 0.0187-in (0.5-mm) thick stainless steel.
5. Roof-Drain Flashing: 4.0 lb/sq ft (1.6-mm thick), hard-tempered lead.
6. Scuppers: 16 oz/sq ft (0.55-mm thick) copper.
7. Exposed Trim, Gravel Stops, and Fasciae: 0.0187-in (0.5-mm) thick stainless steel.
8. Copings: 0.050-in (1.2-mm) thick aluminum.
9. Base Flashing: 0.0187-in (0.5-mm) thick stainless steel.
10. Counterflashing: 0.0187-in (0.5-mm) thick stainless steel.
11. Flashing Receivers: 0.0156-in (0.4-mm) thick stainless steel.
12. Valley Flashing: 16 oz/sq ft (0.55-mm thick) copper.
13. Drip Edges: 0.0217-in (0.55-mm) thick galvanized steel.
14. Eave Flashing: 0.0217-in (0.55-mm) thick galvanized steel.
15. Equipment Support Flashing: 0.0276-in (0.7-mm) thick galvanized steel.
16. Roof-Penetration Flashing: 0.0276-in (0.7-mm) thick galvanized steel.
17. Shower Pans: 4.0 lb/sq ft (1.6-mm thick), hard-tempered lead.
18. Overhead-Piping Safety Pans: 0.0250-in (0.65-mm) thick stainless steel.
19. Roof Expansion-Joint Cover: 0.0276-in (0.7-mm) thick galvanized steel.
20. Roof-to-Wall Expansion-Joint Cover: 0.0336-in (0.85-mm) thick galvanized steel.

B. Coil-Coated Aluminum Finish: 2-coat fluoropolymer Hylar 5000 or Kynar 500.

1. Color and Gloss: Match Architect's sample.
   Color and Gloss: As selected by Architect.

C. Coil-Coated Galvanized Steel Sheet Finish: 2-coat fluoropolymer Hylar 5000 or Kynar 500.

1. Color and Gloss: As indicated by manufacturer's color and gloss designations.
   Color and Gloss: Match Architect's sample.

D. Shop Finish, Rain Drainage: Baked-on, white-acrylic shop finish on gutters, downspouts, and similar exposed units; 1.0-mil (0.025-mm) dry film thickness.

3 EXECUTION

3.1 INSTALLATION

A. Comply with manufacturer's instructions and SMACNA's "Architectural Sheet Metal Manual" allow for thermal expansion; set true to line and level as indicated. Install Work

with laps, joints and seams permanently watertight and weatherproof; conceal fasteners where possible.

1. Roof-Edge Flashings: Secure metal flashings at roof edges according to FM Loss Prevention Data Sheet 1-49 for specified wind zone.

B. Expansion Provisions: Provide for thermal expansion of exposed sheet metal Work. Space movement joints at maximum of 10-ft (3-m) with no joints allowed within 24-in (610-mm) of corner or intersection. Where lapped or bayonet-type expansion provisions in Work cannot be used or would not be sufficiently weatherproof and waterproof, form expansion joints of intermeshing hooked flanges, not less than 1-in (25-mm) deep, filled with mastic sealant (concealed within joints).

C. Soldered Joints: Clean surfaces to be soldered, removing oils and foreign matter. Pretin edges of sheets to be soldered to a width of 1-1/2-in (38-mm), except where pretinned surface would show in finished Work.

1. Do not solder aluminum.

2. Pretinning is not required for lead.

D. Sealed Joints: Form nonexpansion, but movable, joints in metal to accommodate elastomeric sealant to comply with SMACNA standards. Fill joint with sealant and form metal to completely conceal sealant.

E. Seams: Fabricate nonmoving seams in sheet metal with flat-lock seams. Tin edges to be seamed, form seams and solder.

F. Seams: Fabricate nonmoving seams in aluminum with flat-lock seams. Form seams and seal with epoxy seam sealer. Rivet joints for additional strength.

G. Separations: Separate noncompatible metals or corrosive substrates with a coating of asphalt mastic or other permanent separation as recommended by manufacturer.

H. Counterflashings: Coordinate installation with installation of assemblies to be protected by counterflashing. Install counterflashings in reglets or receivers. Secure in a waterproof manner by means of snap-in installation and sealant, lead wedges and sealant, interlocking folded seam, or blind rivets and sealant. Lap counterflashing joints a minimum of 2-in (50-mm) and bed with sealant.

I. Roof-Drainage System: Coordinate installation with roofing installation. Coordinate flashing and sheet metal items for steep-sloped roofs with roofing installation.

J. Overhead-Piping Safety Pans: Suspend pans from pipe and install drain line to plumbing waste or drain line.

K. Equipment Support Flashing: Coordinate installation with roofing and equipment installation. Weld or seal flashing to equipment support member

L. Roof-Penetration Flashing: Coordinate installation with roofing and installation of items penetrating roof.

** END OF SECTION **

SECTION 07900
JOINT SEALANTS

1 GENERAL

1.1 SCOPE OF WORK

A. Furnish all materials, labor, equipment and incidentals required to install all sealants, caulking joint fillers, and accessories as shown on the Drawings and as specified herein.

B. Seal joints as indicated in the schedule at the end of this Section. Joints noted on the drawings for "sealant," "caulk," or "caulking" shall be sealed as specified herein. Joints of a similar nature to those in the schedule shall be sealed in accordance with the schedule, whether so indicated on the Drawings or not.

1. Seal all exterior joints between adjacent materials, joints between frames or louvers and adjacent materials, copings, masonry control joints, and all other joints shown on the Drawings or required for completion of the work.

2. Seal all interior joints between frames and masonry, at tops of masonry walls, between masonry and structural concrete, between floor joints in tile, joints in rooms to be airtight, joints around plumbing fixtures, and all other joints shown on the Drawings or required for completion of the work.

1.2 RELATED WORK

A. Concrete Joint and Joint Accessories are included in Section 03250.

1.3 DEFINITIONS

A. Substrate type shall be as defined in ASTM C920 and as follows:

1. Type M: Concrete, concrete masonry units, brick, mortar and natural stone. The term masonry shall be defined to include brick, stone, and concrete masonry work.

2. Type G: Glass and transparent plastic glazing sheets.

3. Type A: Metals, porcelain, glazed tile, and smooth plastics.

4. Type O: Wood, unglazed tile, and substrates not included in preceding categories.

1.4 SUBMITTALS

A. Materials and accessories for concrete joints are specified in Division 3. Materials and accessories for masonry joints are specified in Division 4. Submit sealers for concrete and masonry joints together with required joint accessories in a single package. Materials used together in the same joint shall be compatible.

B. Shop drawings and product data, in accordance with Section 01300, showing materials of construction and details of installation for:

1. Sealers. Manufacturer's catalog cuts, specification data, color chart, and installation instructions. Demonstrate compliance with ASTM standards specified including specific type, grade, and class. Identify end use and location of each material submitted. Include manufacturer's cautions regarding substrates, substrate preparation, or materials that will inhibit bond or otherwise damage the sealer.

C. Samples

1. Sealers exposed to view. Submit two sets of cured samples of actual products in full range of manufacturer's standard colors.

2. Submit for review two sets of representative samples of any or all other materials required for the work of this Section when requested by the Engineer.

1.5 REFERENCE STANDARDS

A. American Society for Testing and Materials (ASTM)

1. ASTM C920 - Standard Specification for Elastomeric Joint Sealants.

2. ASTM C1193 - Standard Guide for Use of Joint Sealants.

B. National Sanitation Foundation (NSF)

1. Standard 61 - Drinking Water System Components Health Effects.

2. Listings - Drinking Water System Components.

C. Where reference is made to one of the preceding standards, the revision in effect at the time of bid opening shall apply unless specifically indicated otherwise.

1.6 DELIVERY, STORAGE, AND HANDLING

A. Deliver materials in unbroken, sealed original containers with legible labels showing manufacturer, product name or designation, color, shelf life, and installation instructions.

B. Store sealers in accordance with the manufacturer's instructions. Do not use sealers that have been stored for a period of time exceeding the recommended shelf life of the materials.

1.7 PROJECT/SITE REQUIREMENTS

A. Environmental Requirements

1. Do not install sealers if any of the following conditions exist:

a. Air or substrate temperature exceeds the range recommended by the sealer manufacturer, or is below 40°F.

b. Substrate is wet, damp, or covered with snow, ice, frost, or other deleterious material.

B. Dimensional Requirements

1. Provide sealer depth as recommended by the manufacturer. If no other recommendations are provided, sealer depth shall be equal to one-half the width of the joint being sealed.

2. Do not install sealers if joint dimensions are less than or greater than that recommended by the sealer manufacturer. In such cases, obtain sealer manufacturer's recommendations for alternative procedures, and advise Architect/Engineer of anticipated modifications.

1.8 WARRANTY

A. Submit written warranty signed by General Contractor, Installer, and Product Manufacturer, jointly guaranteeing to correct failures in sealer work that occur within 5 years after substantial completion, without reducing or otherwise limiting any other rights to correction that the Owner may have under the provisions of these Contract Documents. Failure is defined to mean failure to remain watertight due to faulty materials or workmanship.

2 PRODUCTS

2.1 GENERAL

A. The use of a manufacturer's name and model or catalog number is for the purpose of establishing the standard of quality and general configuration desired.

B. Like items of materials/equipment shall be the end products of one manufacturer in order to provide standardization for appearance.

C. Provide only materials that are compatible with the substrates, with each other, and with other construction to be incorporated into the joints.

D. Sealer colors shall be as selected by the Architect/Engineer from manufacturer's standard colors.

2.2 MATERIALS

A. Elastomeric Sealant. Sealant shall comply with the requirements of ASTM C920 including specific Type, Grade, Class, and Uses indicated. Sealants for use in contact with potable

water shall be listed by NSF as complying with the requirements of NSF Standard 61 and shall be resistant to chlorine concentrations of up to 4 milligrams per liter (mg/L).

1. Polyurethane or Polysulfide Sealant
   a. Exterior and interior sealant for joints on the horizontal plane shall be a two-part, pourable, self-leveling polyurethane or polysulfide-based sealant conforming to the requirements of ASTM C920, Class 25. Use shall be NT, M, G, A, or O as required by the substrate.
   b. Exterior and interior sealant for joints on surfaces other than horizontal shall be a one-part, non-sag or gun-grade polyurethane or polysulfide-based conforming to the requirements of ASTM C920, Class 25. Use shall be NT, M, G, A, or O as required by the substrate.
2. Silicone Sealants
   a. Medium Movement Silicone Sealant: One- or two-part non-acid-curing, Grade NS, Class 25, Use NT. Sealant shall provide movement capability of more than 25 percent, but less than 50 percent, in both extension and compression.
   b. Mildew-Resistant Silicone Sealant: One-part, Type S, Grade NS, Class 25, Use NT. Sealant shall be formulated with fungicide and suitable for interior use on nonporous surfaces.

B. Sealant Backers
1. Backers shall be non-staining and as recommended by the sealant manufacturer for their specific use.
2. Backer Rod, unless otherwise restricted by the sealant manufacturer, shall be flexible, non-absorbent, non-gassing closed cell compressible polyurethane foam preformed to the appropriate size and shape.
3. Bond-Breaker Tape, unless otherwise restricted by the sealant manufacturer, shall be self-adhesive polyethylene or other plastic tape suitable for preventing sealant adhesion.

C. Miscellaneous Materials
1. Primers shall be as recommended by the sealant manufacturer.
2. Cleaners shall be as recommended by the sealant manufacturer. Cleaners shall not damage the finish of materials adjacent to the sealed area.
3. Masking tape shall be non-absorbent and non-staining.
4. Tooling agents shall be as recommended by the sealant manufacturer, and shall be non-staining to the sealant or substrate.

3 EXECUTION

3.1 PREPARATION

A. Verification of Conditions
1. Examine joints for characteristics that may affect sealer performance, including configuration and dimensions.
2. Do not begin installation of joint sealers until unsatisfactory conditions have been corrected.

B. Surface Preparation
1. Cleaning. Just before beginning sealer installation, clean out joints in accordance with the recommendations of the sealer manufacturer and as follows:
   a. Remove all materials that might impair adhesion, including dust, dirt, coatings, paint, oil, and grease.

b. Thoroughly dry damp and wet surfaces.

c. Clean substrates using methods that will not leave residues or impair adhesion.

1) Clean type M and type O substrates by suitable mechanical or chemical methods. Remove laitance and form-release coatings from concrete. Remove loose particles by vacuuming or blowing with oil-free compressed air.

2) Clean type A and type G substrates by chemical or other methods that will not damage the substrate.

2. Masking. Install masking tape to keep primers and sealers off adjacent surfaces that would be damaged by contact or cleanup, and to provide a neat, finished edge. Remove tape as soon as practical.

3. Priming. Prime substrate as recommended by the sealer manufacturer

4. Install fillers where needed to provide proper joint depth or support for sealant backers.

3.2 INSTALLATION

A. Comply with sealer manufacturers' installation instructions and recommendations, except where more restrictive requirements are specified.

B. Backers. Install backers at depth required to provide shape and depth of installed sealant that allows the greatest joint movement without sealant failure. Make backers continuous without gaps, tears, or punctures. Do not stretch or twist backers. If backers become wet or damp before installation of sealant, thoroughly dry before proceeding.

C. Bond-breaker tape. Use bond breaker tape where indicated or necessary to prevent sealant from adhering to back or third side of joint.

D. Sealants. Install sealants in accordance with ASTM C1193. Using methods recommended by the manufacturer, completely fill the joints. Unless otherwise recommended by the sealant manufacturer or detailed on the Drawings, install sealant with a 2 to 1 ratio of width to thickness. Make full contact with bonding surfaces. Tool non-sag sealants to smooth surfaces, eliminating air pockets. Tooling shall be to concave joint shape shown in Figure 5A of ASTM C1193 unless otherwise indicated.

3.3 PROTECTION AND CLEANING

A. Maintain surfaces of all materials adjoining sealed joints free of smears or soiling due to sealing operations. Clean surfaces adjacent to joints as work progresses and before sealants set using methods and materials approved by manufacturers of sealers and of surfaces to be cleaned.

B. Protect joint sealers from contamination and damage.

C. Remove and replace damaged sealers.

3.4 SCHEDULES

A. General

1. Unless otherwise indicated, joints around the perimeter of frames shall be sealed using sealer specified for the substrate adjacent to the frame.

B. Expansion and control joints in exterior and interior surfaces of cast-in-place concrete or masonry walls:

1. Non-sag polyurethane or polysulfide sealant; concave joint configuration.

2. Backer rod or bond-breaker tape.

C. Expansion and control joints in exterior and interior surfaces of cast-in-place concrete slabs:

1. Self-leveling polyurethane or polysulfide sealant.

2. Backer rod or bond-breaker tape.

D. Interior joints at wet areas above Finish Floor (including perimeter of bath fixtures, counter tops, glazed ceramic tile areas):
   1. Mildew-resistant silicone sealant; concave joint configuration.
   2. Bond-breaker tape where appropriate.
E. Exterior or interior joints for which no other sealer is indicated:
   1. Medium movement silicone sealant; concave joint configuration.
   2. Backer rod or bond-breaker tape.

** END OF SECTION **

SECTION 08110
STEEL DOORS AND FRAMES

1 GENERAL

1.1 RELATED DOCUMENTS

A. Drawings and general provisions of the Contract, including General and Supplementary Conditions and Division 1 Specification Sections, apply to this Section.

1.2 MEASUREMENT AND PAYMENT

A. No separate payment will be made for work performed under this Section. Include the cost for this work in the lump sum Base Bid.

1.3 SUMMARY

A. This Section includes the following:

1. Standard hollow-metal steel doors.
2. Standard hollow-metal steel frames.

B. Related Sections include the following:

1. Division 4 Section "Unit Masonry” for building anchors into and grouting standard steel frames in masonry construction.
2. Division 8 Section “Glazing” for glazed lites in standard steel doors and frames.
3. Division 8 Sections for door hardware for standard steel doors.
4. Division 9 painting Sections for field painting standard steel doors and frames.

1.4 DEFINITIONS

A. Minimum Thickness: Minimum thickness of base metal without coatings.

1.5 SUBMITTALS

A. Product Data: Include construction details, material descriptions, core descriptions, label compliance, fire-resistance and temperature-rise ratings, and finishes for each type of steel door and frame specified, and as shown on the Door and Frame Schedule on the Drawings.

B. Shop Drawings: In addition to requirements below, provide a schedule of standard steel doors and frames using same reference numbers for details and openings as those on Drawings:

1. Elevations of each door design.
2. Details of doors, including vertical and horizontal edge details.
3. Frame details for each frame type, including dimensioned profiles.
4. Details and locations of reinforcement and preparations for hardware.
5. Details of each different wall opening condition.
6. Details of anchorages, accessories, joints, and connections.
7. Details of glazing frames and stops showing glazing.
8. Details of conduit and preparations for electrified door hardware and controls.

C. Coordination Drawings: Drawings of each opening, including door and frame, drawn to scale and coordinating door hardware. Show elevations of each door design type, showing dimensions, locations of door hardware, and preparations for power, signal, and electrified control systems.

D. Samples for Initial Selection: For units with factory-applied color finishes.

E. Samples for Verification: For each type of exposed finish required, prepared on Samples of not less than 3 by 5 inches (75 by 125 mm).

F. Qualification Data: For Installer.

1.6 QUALITY ASSURANCE

A. Installer Qualifications: An employer of workers trained and approved by manufacturer.

B. Source Limitations: Obtain standard steel doors and frames through one source from a single manufacturer.

C. Smoke-Control Door Assemblies: Comply with NFPA 105 or UL 1784.

D. Windstorm Resistant Exterior Openings (Texas Department of Insurance): Provide exterior hollow metal and door hardware assemblies approved by the Texas Department of Insurance, including anchorage, capable of withstanding wind load design pressures calculated for this project by a registered architect or engineer and are part of the construction documents per the Texas Department of Insurance, authorities having jurisdiction, and the International Building Code Design Loads Section 1609.

1.7 DELIVERY, STORAGE, AND HANDLING

A. Deliver doors and frames palletized, wrapped, or crated to provide protection during transit and Project-site storage. Do not use nonvented plastic.

1. Provide additional protection to prevent damage to finish of factory-finished doors and frames.

B. Deliver welded frames with two removable spreader bars across bottom of frames, tack welded to jambs and mullions.

C. Store doors and frames under cover at Project site. Place units in a vertical position with heads up, spaced by blocking, on minimum 4-inch- (102-mm-) high wood blocking. Avoid using non-vented plastic or canvas shelters that could create a humidity chamber.

1. If wrappers on doors become wet, remove cartons immediately. Provide minimum 1/4-inch (6-mm) space between each stacked door to permit air circulation.

1.8 PROJECT CONDITIONS

A. Field Measurements: Verify openings by field measurements before fabrication and indicate measurements on shop drawings.

1. Established Dimensions: Where field measurements cannot be made without delaying the Work, establish opening dimensions and proceed with fabricating standard steel frames without field measurements. Coordinate wall construction to ensure that actual opening dimensions correspond to established dimensions.

1.9 COORDINATION

A. Coordinate installation of anchorages for standard steel frames. Furnish setting drawings, templates, and directions for installing anchorages, including sleeves, concrete inserts, anchor bolts, and items with integral anchors, that are to be embedded in concrete or masonry. Deliver such items to Project site in time for installation.

2 PRODUCTS

2.1 MANUFACTURERS

A. Available Manufacturers: Subject to compliance with requirements, manufacturers offering products that may be incorporated into the Work include, but are not limited to, the following:

1. Amweld Building Products, LLC.

2. Ceco Door Products; an ASSA ABLOY Group Company.

3. CURRIES Company; an ASSA ABLOY Group Company.

4. Steelcraft; an Ingersoll-Rand Company.
5. Or approved equal.

2.2 MATERIALS

A. Cold-Rolled Steel Sheet: ASTM A 1008/A 1008M, Commercial Steel (CS), Type B; suitable for exposed applications.

B. Hot-Rolled Steel Sheet: ASTM A 1011/A 1011M, Commercial Steel (CS), Type B; free of scale, pitting, or surface defects; pickled and oiled.

C. Metallic-Coated Steel Sheet: ASTM A 653/A 653M, Commercial Steel (CS), Type B; with minimum A40 (ZF120) zinc-iron-alloy (galvannealed) coating designation.

D. Electrolytic Zinc-Coated Steel Sheet: ASTM A 591/A 591M, Commercial Steel (CS), Class B coating; mill phosphatized.

E. Supports and Anchors: After fabricating, galvanize units to be built into exterior walls according to ASTM A 153/A 153M, Class B.

F. Inserts, Bolts, and Fasteners: Provide items to be built into exterior walls, hot-dip galvanized according to ASTM A 153/A 153M.

G. Powder-Actuated Fasteners in Concrete: Fastener system of type suitable for application indicated, fabricated from corrosion-resistant materials, with clips or other accessory devices for attaching standard steel door frames of type indicated.

H. Grout: Comply with Division 4 Section "Unit Masonry."

I. Grout: Comply with ASTM C 476, with a slump of 4 inches (102 mm) for standard steel door frames built into concrete or masonry, as measured according to ASTM C 143/C 143M.

J. Mineral-Fiber Insulation: ASTM C 665, Type I (blankets without membrane facing); consisting of fibers manufactured from slag or rock wool with 6- to 12-lb/ft3 (96- to 192-kg/m3) density; with maximum flame-spread and smoke-developed indexes of 25 and 50, respectively; passing ASTM E 136 for combustion characteristics.

K. Glazing: Comply with requirements in Division 8 Section "Glazing."

L. Bituminous Coating: Cold-applied asphalt mastic, SSPC-Paint 12, compounded for 15-mil (0.4-mm) dry film thickness per coat. Provide inert-type noncorrosive compound free of asbestos fibers, sulfur components, and other deleterious impurities.

2.3 STANDARD STEEL DOORS

A. General: Provide 1-3/4 inch doors of design indicated, not less than thickness indicated; fabricated with smooth surfaces, without visible joints or seams on exposed faces, unless otherwise indicated. Comply with ANSI A250.8.

1. Design: Flush panel.
2. Core Construction: Manufacturer's standard Kraft-paper honeycomb, polystyrene, polyurethane, mineral-board, or vertical steel-stiffener core that produces doors complying with ANSI A250.8. Provide a minimum R-value of 11-12.
3. Vertical Edges for Single-Acting Doors: Square edge and Beveled edge unless square edge is indicated.
   a. Beveled Edge: 1/8 inch in 2 inches (3 mm in 50 mm).
4. Top and Bottom Edges: Closed with flush or inverted 0.042-inch- (1.0-mm-) thick end closures or channels of same material as face sheets.
5. Tolerances: Comply with SDI 117, "Manufacturing Tolerances for Standard Steel Doors and Frames."

B. Exterior Doors: Face sheets fabricated from metallic-coated steel sheet. Provide doors complying with requirements indicated below by referencing ANSI A250.8 for level and model and ANSI A250.4 for physical endurance level:

1. Level 2 and Physical Performance Level B (Heavy Duty), Model 1 (Full Flush) and 2 (Seamless).

C. Hardware Reinforcement: Fabricate reinforcement plates from same material as door face sheets to comply with the following minimum sizes:

1. Hinges: Minimum 0.123 inch (3.0 mm) thick by 1-1/2 inches (38 mm) wide by 6 inches (152 mm) longer than hinge, secured by not less than six spot welds.
2. Lock Face, Flush Bolts, Closers, and Concealed Holders: Minimum 0.067 inch (1.7 mm) thick.
3. All Other Surface-Mounted Hardware: Minimum 0.067 inch (1.7 mm) thick.

D. Fabricate concealed stiffeners and hardware reinforcement from either cold- or hot-rolled steel sheet.

2.4 STANDARD STEEL FRAMES

A. General: Comply with ANSI A250.8 and with details indicated for type and profile.

B. Exterior Frames: Fabricated from metallic-coated steel sheet.

1. Fabricate frames with mitered or coped and welded face corners and seamless face joints.

C. Interior Frames: Fabricated from cold-rolled steel sheet, unless otherwise indicated to comply with exterior frame requirements.

1. Fabricate frames with mitered or coped and welded face corners and seamless face joints, unless otherwise indicated.

D. Hardware Reinforcement: Fabricate reinforcement plates from same material as frames to comply with the following minimum sizes:

1. Hinges: Minimum 0.123 inch (3.0 mm) thick by 1-1/2 inches (38 mm) wide by 6 inches (152 mm) longer than hinge, secured by not less than 6 spot welds.
2. Lock Face, Flush Bolts, Closers, and Concealed Holders: Minimum 0.067 inch (1.7 mm) thick.
3. All Other Surface-Mounted Hardware: Minimum 0.067 inch (1.7 mm) thick.

E. Supports and Anchors: Fabricated from electrolytic zinc-coated or metallic-coated steel sheet.

F. Jamb Anchors:

1. Masonry Type: Adjustable strap-and-stirrup or T-shaped anchors to suit frame size, not less than 0.042 inch (1.0 mm) thick, with corrugated or perforated straps not less than 2 inches (50 mm) wide by 10 inches (250 mm) long; or wire anchors not less than 0.177 inch (4.5 mm) thick.
2. Compression Type for Slip-on Frames: Adjustable compression anchors.

G. Floor Anchors: Formed from same material as frames, not less than 0.042 inch (1.0 mm) thick, and as follows:

1. Monolithic Concrete Slabs: Clip-type anchors, with two holes to receive fasteners.
2. Separate Topping Concrete Slabs: Adjustable-type anchors with extension clips, allowing not less than 2-inch (50-mm) height adjustment. Terminate bottom of frames at finish floor surface.

H. Fabricate concealed stiffeners and hardware reinforcement from either cold- or hot-rolled steel sheet.

I. Ceiling Struts: Minimum 3/8-inch-thick by 2-inch- (9.5-mm-thick by 50-mm-) wide steel.

2.5 STOPS AND MOLDINGS

A. Moldings for Glazed Lites in Doors: Minimum 0.032 inch (0.8 mm) thick, fabricated from same material as door face sheet in which they are installed.

B. Fixed Frame Moldings: Formed integral with standard steel frames, minimum 5/8 inch (16 mm) high, unless otherwise indicated.

C. Loose Stops for Glazed Lites in Frames: Minimum 0.032 inch (0.8 mm) thick, fabricated from same material as frames in which they are installed.

2.6 FABRICATION

A. General: Fabricate standard steel doors and frames to be rigid and free of defects, warp, or buckle. Accurately form metal to required sizes and profiles, with minimum radius for thickness of metal. Where practical, fit and assemble units in manufacturer's plant. To ensure proper assembly at Project site, clearly identify work that cannot be permanently factory assembled before shipment.

B. Standard Steel Doors:

1. Exterior Doors: Provide weep-hole openings in bottom of exterior doors to permit moisture to escape. Seal joints in top edges of doors against water penetration.

2. Glazed Lites: Factory cut openings in doors.

C. Standard Steel Frames: Where frames are fabricated in sections due to shipping or handling limitations, provide alignment plates or angles at each joint, fabricated of same thickness metal as frames.

1. Welded Frames: Weld flush face joints continuously; grind, fill, dress, and make smooth, flush, and invisible.

2. Removable Transom Bar Frames: Provide closed tubular members with no visible face seams or joints; fabricated from same material as door frame.

3. Provide countersunk, flat- or oval-head exposed screws and bolts for exposed fasteners, unless otherwise indicated.

4. Plaster Guards: Weld guards to frame at back of hardware mortises in frames installed in concrete or masonry.

5. Where installed in masonry, leave vertical mullions in frames open at top for grouting.

6. Floor Anchors: Weld anchors to bottom of jambs and mullions with at least four spot welds per anchor.

7. Jamb Anchors: Provide number and spacing of anchors as follows:

a. Masonry Type: Locate anchors not more than 18 inches (457 mm) from top and bottom of frame. Space anchors not more than 32 inches (813 mm) O.C. and as follows:

1) Two anchors per jamb up to 60 inches (1524 mm) in height.

2) Three anchors per jamb from 60 to 90 inches (1524 to 2286 mm) in height.

3) Four anchors per jamb from 90 to 120 inches (2286 to 3048 mm) in height.

4) Four anchors per jamb plus 1 additional anchor per jamb for each 24 inches (610 mm) or fraction thereof more than 120 inches (3048 mm) in height.

8. Door Silencers: Except on weather-stripped doors, drill stops to receive door silencers as follows. Provide plastic plugs to keep holes clear during construction.

a. Single-Door Frames: Drill stop in strike jamb to receive three door silencers.

b. Double-Door Frames: Drill stop in head jamb to receive two door silencers.

D. Hardware Preparation: Factory prepare standard steel doors and frames to receive templated mortised hardware; include cutouts, reinforcement, mortising, drilling, and tapping, according to the Door Hardware Schedule and templates furnished as specified in Division 8 Section "Door Hardware."

1. Reinforce doors and frames to receive nontemplated mortised and surface-mounted door hardware.

2. Comply with applicable requirements in ANSI A250.6 and ANSI/DHI A115 Series specifications for door and frame preparation for hardware. Locate hardware as indicated on shop drawings or, if not indicated, according to ANSI A250.8.

E. Stops and Moldings: Provide stops and moldings around glazed lites where indicated. Form corners of stops and moldings with butted or mitered hairline joints.

1. Single Glazed Lites: Provide fixed stops and moldings welded on secure side of door or frame.
2. Provide fixed frame moldings on outside of exterior and on secure side of interior doors and frames.
3. Provide loose stops and moldings on inside of doors and frames.
4. Coordinate rabbet width between fixed and removable stops with type of glazing and type of installation indicated.

2.7 STEEL FINISHES

A. General: Comply with NAAMM's "Metal Finishes Manual for Architectural and Metal Products" for recommendations for applying and designating finishes.

1. Finish standard steel door and frames after assembly.

B. Metallic-Coated Steel Surface Preparation: Clean surfaces with nonpetroleum solvent so surfaces are free of oil and other contaminants. After cleaning, apply a conversion coating suited to the organic coating to be applied over it. Clean welds, mechanical connections, and abraded areas, and apply galvanizing repair paint specified below to comply with ASTM A 780.

1. Galvanizing Repair Paint: High-zinc-dust-content paint for re-galvanizing welds in steel, complying with SSPC-Paint 20.

C. Steel Surface Preparation: Clean surfaces to comply with SSPC-SP 1, "Solvent Cleaning"; remove dirt, oil, grease, or other contaminants that could impair paint bond. Remove mill scale and rust, if present, from uncoated steel; comply with SSPC-SP 3, "Power Tool Cleaning," or SSPC-SP 6/NACE No. 3, "Commercial Blast Cleaning."

D. Factory Priming for Field-Painted Finish: Apply shop primer specified below immediately after surface preparation and pretreatment. Apply a smooth coat of even consistency to provide a uniform dry film thickness of not less than 0.7 mils (0.018 mm).

1. Shop Primer: Manufacturer's standard, fast-curing, lead- and chromate-free primer complying with ANSI A250.10 acceptance criteria; recommended by primer manufacturer for substrate; compatible with substrate and field-applied finish paint system indicated; and providing a sound foundation for field-applied topcoats despite prolonged exposure.

E. Factory-Applied Paint Finish: Manufacturer's standard, complying with ANSI A250.3 for performance and acceptance criteria.

1. Color and Gloss: Color and finish shall match existing color and finish at the project site.

3 EXECUTION

3.1 EXAMINATION

A. Examine substrates, areas, and conditions, with Installer present, for compliance with requirements for installation tolerances and other conditions affecting performance of standard steel doors and frames.

1. Examine roughing-in for embedded and built-in anchors to verify actual locations of standard steel frame connections before frame installation.
2. For the record, prepare written report, endorsed by Installer, listing conditions detrimental to performance of work.

3. Proceed with installation only after unsatisfactory conditions have been corrected.

3.2 PREPARATION

A. Remove welded-in shipping spreaders installed at factory.

B. Prior to installation and with installation spreaders in place, adjust and securely brace standard steel door frames for squareness, alignment, twist, and plumb to the following tolerances:

1. Squareness: Plus or minus 1/16 inch (1.6 mm), measured at door rabbet on a line 90 degrees from jamb perpendicular to frame head.

2. Alignment: Plus or minus 1/16 inch (1.6 mm), measured at jambs on a horizontal line parallel to plane of wall.

3. Twist: Plus or minus 1/16 inch (1.6 mm), measured at opposite face corners of jambs on parallel lines, and perpendicular to plane of wall.

4. Plumbness: Plus or minus 1/16 inch (1.6 mm), measured at jambs on a perpendicular line from head to floor.

C. Drill and tap doors and frames to receive nontemplated mortised and surface-mounted door hardware.

3.3 INSTALLATION

A. General: Provide doors and frames of sizes, thicknesses, and designs indicated. Install standard steel doors and frames plumb, rigid, properly aligned, and securely fastened in place; comply with Drawings and manufacturer's written instructions.

B. Standard Steel Frames: Install standard steel frames for doors, sidelights, transoms, borrowed lights and other openings, of size and profile indicated. Comply with SDI 105.

1. Set frames accurately in position; plumbed, aligned, and braced securely until permanent anchors are set. After wall construction is complete, remove temporary braces, leaving surfaces smooth and undamaged.

a. At fire-protection-rated openings, install frames according to NFPA 80.

b. Where frames are fabricated in sections due to shipping or handling limitations, field splice at approved locations by welding face joint continuously; grind, fill, dress, and make splice smooth, flush, and invisible on exposed faces.

c. Install frames with removable glazing stops located on secure side of opening.

d. Install door silencers in frames before grouting.

e. Remove temporary braces necessary for installation only after frames have been properly set and secured.

f. Check plumb, squareness, and twist of frames as walls are constructed. Shim as necessary to comply with installation tolerances.

g. Apply bituminous coating to backs of frames that are filled with mortar, grout, and plaster containing antifreezing agents.

2. Floor Anchors: Provide floor anchors for each jamb and mullion that extends to floor and secure with postinstalled expansion anchors.

a. Floor anchors may be set with powder-actuated fasteners instead of postinstalled expansion anchors if so indicated and approved on shop drawings.

3. Masonry Walls: Coordinate installation of frames to allow for solidly filling space between frames and masonry with mortar as specified in Division 4 Section "Unit Masonry Assemblies."

4. Ceiling Struts: Extend struts vertically from top of frame at each jamb to supporting construction above, unless frame is anchored to masonry or to other structural support at each jamb. Bend top of struts to provide flush contact for securing to supporting

construction above. Provide adjustable wedged or bolted anchorage to frame jamb members.

5. Installation Tolerances: Adjust standard steel door frames for squareness, alignment, twist, and plumb to the following tolerances:
    a. Squareness: Plus or minus 1/16 inch (1.6 mm), measured at door rabbet on a line 90 degrees from jamb perpendicular to frame head.
    b. Alignment: Plus or minus 1/16 inch (1.6 mm), measured at jambs on a horizontal line parallel to plane of wall.
    c. Twist: Plus or minus 1/16 inch (1.6 mm), measured at opposite face corners of jambs on parallel lines, and perpendicular to plane of wall.
    d. Plumbness: Plus or minus 1/16 inch (1.6 mm), measured at jambs at floor.

C. Standard Steel Doors: Fit hollow-metal doors accurately in frames, within clearances specified below. Shim as necessary.
1. Non-Fire-Rated Standard Steel Doors:
    a. Jambs and Head: 1/8 inch (3 mm) plus or minus 1/16 inch (1.6 mm).
    b. Between Edges of Pairs of Doors: 1/8 inch (3 mm) plus or minus 1/16 inch (1.6 mm).
    c. Between Bottom of Door and Top of Threshold: Maximum 3/8 inch (9.5 mm).
    d. Between Bottom of Door and Top of Finish Floor (No Threshold): Maximum 3/4 inch (19 mm).
2. Fire-Rated Doors: Install doors with clearances according to NFPA 80.
3. Smoke-Control Doors: Install doors according to NFPA 105.

D. Glazing: Comply with installation requirements in Division 8 Section "Glazing" and with standard steel door and frame manufacturer's written instructions.
1. Secure stops with countersunk flat- or oval-head machine screws spaced uniformly not more than 9 inches (230 mm) O.C., and not more than 2 inches (50 mm) O.C. from each corner.

3.4 ADJUSTING AND CLEANING

A. Final Adjustments: Check and readjust operating hardware items immediately before final inspection. Leave work in complete and proper operating condition. Remove and replace defective work, including standard steel doors or frames that are warped, bowed, or otherwise unacceptable.

B. Clean grout and other bonding material off standard steel doors and frames immediately after installation.

C. Prime-Coat Touchup: Immediately after erection, sand smooth rusted or damaged areas of prime coat, and apply touch up of compatible air-drying primer.

D. Galvannealed Surfaces: Clean abraded areas and repair with galvanizing repair paint according to manufacturer's written instructions.

** END OF SECTION **

SECTION 08331
OVERHEAD COILING DOORS

1 GENERAL

1.1 RELATED DOCUMENTS

A. Drawings and general provisions of the Contract, including General and Supplementary Conditions and Division 1 Specification Sections, apply to this Section.

1.2 MEASUREMENT AND PAYMENT

A. No separate payment will be made for work performed under this Section. Include the cost for this work in the lump sum Base Bid.

1.3 SUMMARY

A. This Section includes the following types of manually and electric-motor-operated overhead coiling doors:

1. Manual, insulated service doors.

1.4 RELATED SECTIONS INCLUDE THE FOLLOWING:

A. Division 5 Section "Metal Fabrications" for miscellaneous steel supports.

B. Division 8 Section "Door Hardware" for lock cylinders and keying.

C. Division 16 Sections for electrical service and connections for powered operators and accessories.

1.5 DEFINITIONS

A. Operation Cycle: One cycle of a door is complete when it is moved from the closed position to the fully open position and returned to the closed position.

1.6 PERFORMANCE REQUIREMENTS

A. Structural Performance: Provide overhead coiling doors capable of withstanding the effects of gravity loads and the following loads and stresses without evidencing permanent deformation of door components:

1. Wind Load: As shown on Drawings, acting inward and outward.

2. Impact Test for Flying Debris: Comply with ASTM E 1996, tested according to ASTM E 1886.

a. Level of Protection: Enhanced Protection.

b. Wind Zone: Wind speed as shown on the Drawings, pressure test to 1/2 and 1-1/2 x design pressure (positive and negative).

B. Operation-Cycle Requirements: Provide overhead coiling door components and operators capable of operating for not less than 20,000 cycles and for 10 cycles per day.

1. Include tamperproof cycle counter.

C. Air Leakage Requirements: Provide overhead door which meets air infiltration requirements of a maximum of 1.0 cfm/ft^2 per NRFC 400.

1.7 SUBMITTALS

A. Product Data: For each type and size of overhead coiling door and accessory. Include the following:

B. Shop Drawings: For special components and installations not dimensioned or detailed in manufacturer's product data.

C. Samples for Initial Selection: Manufacturer's color charts showing full range of colors available for units with factory-applied finishes.

D. Samples for Verification: Of each type of exposed finish required, prepared on Samples of size indicated below.

1. Curtain Slats: 12 inches (305 mm) long.
2. Guides: 6 inches (150 mm) long.
3. Brackets: 6 inches (150 mm) square. Not required if same as Guides.
4. Hood: 6 inches (150 mm) square.

E. Qualification Data: For Installer.

1.8 QUALITY ASSURANCE

A. Installer Qualifications: Manufacturer's authorized representative who is trained and approved for both installation and maintenance of units required for this Project.

B. Source Limitations: Obtain overhead coiling doors through one source from a single manufacturer.

1. Obtain operators and controls from overhead coiling door manufacturer.

C. Electrical Components, Devices, and Accessories: Listed and labeled as defined in NFPA 70, Article 100.

2 PRODUCTS

2.1 MANUFACTURERS

A. Manufacturer: Subject to compliance with requirements, provide products by one of the following:

1. Alpine Overhead Doors, Inc.
2. Atlas Door; Div. of Clopay Building Products Company, Inc.
3. Cookson Company
4. Cornell Iron Works, Inc.
5. Mahon Door Corporation
6. Overhead Door Corporation
7. Raynor.
8. Windsor Door, a MAGNATRAX Corporation.

2.2 DOOR CURTAIN MATERIALS AND CONSTRUCTION

A. Door Curtains: Fabricate overhead coiling door curtain of interlocking slats, designed to withstand wind loading indicated, in a continuous length for width of door without splices. Unless otherwise indicated, provide slats of thickness and mechanical properties recommended by door manufacturer for performance, size, and type of door indicated, and as follows:

1. Door Curtain Slats: Interlocking 0.50-inch thick, roll-formed aluminum slats
   a. Minimum Base-Metal (Uncoated) Minimum Thickness: 0.050 inch thick
   b. Flat profile slats.
2. Insulation: Fill slat with manufacturer's standard rigid cellular polyisocyanurate or polyurethane-foam-type thermal insulation complying with maximum flame-spread and smoke-developed indexes of 75 and 450, respectively, according to ASTM E 84. Enclose insulation completely within metal slat faces.
3. Inside Curtain Slat Face: To match material of outside metal curtain slat, except 24 ga., 0.0239 inches (0.61 mm) minimum thickness.

B. Endlocks and Windlocks for Service Doors: Malleable-iron casings galvanized after fabrication, secured to curtain slats with galvanized rivets or high-strength nylon. Provide

locks on not less than alternate curtain slats for curtain alignment and resistance against lateral movement.

C. Bottom Bar for Service Doors: Consisting of 2 angles, each not less than 1-1/2 by 1-1/2 by 1/8 inch (38 by 38 by 3 mm) thick; aluminum extrusions to suit type of curtain slats.

D. Curtain Jamb Guides for Service Doors: Fabricate curtain jamb guides of steel angles or channels and angles, with sufficient depth and strength to retain curtain, to allow curtain to operate smoothly, and to withstand loading. Build up units with not less than 3/16-inch- (5-mm-) thick galvanized steel sections complying with ASTM A 36/A 36M and ASTM A 123/A 123M. Slot bolt holes for guide adjustment. Provide removable stops on guides to prevent overtravel of curtain, and a continuous bar for holding windlocks.

2.3 HOODS AND ACCESSORIES

A. Hood: Form to act as weatherseal and entirely enclose coiled curtain and operating mechanism at opening head. Contour to fit end brackets to which hood is attached. Roll and reinforce top and bottom edges for stiffness. Provide closed ends for surface-mounted hoods and provide fascia for any portion of between-jamb mounting projecting beyond wall face. Provide intermediate support brackets as required to prevent sagging.

1. Fabricate hoods to be minimum 24 Ga., 0.040- inch- (1.016- mm-) thick, hot-dip galvanized steel sheet with G90 (Z275) zinc coating, complying with ASTM A 653/A 653M.

2. Shape: Round.

B. Integral Frame, Hood, and Fascia: Provide welded assemblies of the following sheet metal:

1. Fabricate from minimum 0.064-inch- (1.6-mm-) thick, hot-dip galvanized steel sheet with G90 (Z275) zinc coating, complying with ASTM A 653/A 653M.

C. Integral Sills: Fabricate sills as integral part of frame assembly of same sheet metal; 0.078-inch (2.0-mm) minimum thickness.

D. Weather seals: Provide replaceable, adjustable, continuous, compressible weather-stripping gaskets fitted to bottom and top of exterior doors, unless otherwise indicated. At door head, use 1/8-inch- (3-mm-) thick, replaceable, continuous sheet secured to inside of hood.

1. Provide doors with bottom weather seal.

2. In addition, provide replaceable, adjustable, continuous, flexible, 1/8-inch- (3-mm-) thick seals of flexible vinyl, rubber, or neoprene at door jambs for a weathertight installation.

E. Push/Pull Handles: For push-up-operated or emergency-operated doors, provide galvanized steel lifting handles on inside of door.

1. Provide pull-down straps or pole hooks for doors more than 84 inches (2130 mm) high.

F. Fabricate locking device assembly with lock, spring-loaded dead bolt, operating handle, cam plate, and adjustable locking bar to engage through slots in tracks.

1. Locking Bars: Single-jamb side operable from inside and outside.

2. Lock cylinder is specified in Division 8 Section "Door Hardware."

G. If door unit is power operated, provide safety interlock switch to disengage power supply when door is locked.

2.4 COUNTERBALANCING MECHANISM

A. General: Counterbalance doors by means of adjustable-tension, steel helical torsion spring mounted around a steel shaft and contained in a spring barrel connected to door curtain with barrel rings. Use grease-sealed bearings or self-lubricating graphite bearings for rotating members.

B. Counterbalance Barrel: Fabricate spring barrel of hot-formed, structural-quality, welded or seamless carbon-steel pipe, of sufficient diameter and wall thickness to support rolled-up

curtain without distortion of slats and to limit barrel deflection to not more than 0.03 inches/ft (2.5 mm/m) of span under full load.

C. Provide spring balance of one or more oil-tempered, heat-treated steel helical torsion springs. Size springs to counterbalance weight of curtain, with uniform adjustment accessible from outside barrel. Provide cast-steel barrel plugs to secure ends of springs to barrel and shaft.

D. Fabricate torsion rod for counterbalance shaft of cold-rolled steel, sized to hold fixed spring ends and carry torsional load.

E. Brackets: Provide mounting brackets of manufacturer's standard design, either cast iron or cold-rolled steel plate.

2.5 FINISHES, GENERAL

A. General: Comply with NAAMM's "Metal Finishes Manual for Architectural and Metal Products" for recommendations for applying and designating finishes.

B. Appearance of Finished Work: Variations in appearance of abutting or adjacent pieces are acceptable if they are within one-half of the range of approved Samples. Noticeable variations in the same piece are not acceptable. Variations in appearance of other components are acceptable if they are within the range of approved Samples and are assembled or installed to minimize contrast.

C. Finish: Factory applied, Kynar 500. Color to match color of existing overhead coiling doors at the project site.

2.6 MANUAL DOOR OPERATORS

A. Chain hoist.

3 EXECUTION

3.1 INSTALLATION

A. General: Install coiling doors and operating equipment complete with necessary hardware, jamb and head molding strips, anchors, inserts, hangers, and equipment supports.

1. Install fire-rated doors to comply with NFPA 80.

3.2 ADJUSTING

A. Lubricate bearings and sliding parts; adjust doors to operate easily, free of warp, twist, or distortion and with weathertight fit around entire perimeter.

3.3 DEMONSTRATION

A. Engage a factory-authorized service representative to train Owner's maintenance personnel to adjust, operate, and maintain overhead coiling doors. Refer to Division 1 Section “Demonstration and Training."

** END OF SECTION **

SECTION 08710
DOOR HARDWARE

1 GENERAL

1.1 SCOPE OF WORK

A. Provide finish hardware throughout the Work, indicated and specified hereinafter and as needed for a complete and proper installation. As needed, hardware shall be of the type and quality suitable to the service required and comparable to other hardware, as specified.

B. "Finish Hardware" includes items known commercially as finish hardware which are required for swing, sliding and folding doors, except special types of unique and non-matching hardware specified in the same section as the door and door frame.

C. Extent of finish hardware required is indicated on Drawings and in schedules.

D. Types of finish hardware required include the following:

1. Butt Hinges
2. Lock Cylinders and Keys
3. Lock and Latch Sets
4. Exit Devices
5. Closers
6. Electronic Door Control Devices
7. Overhead Holders
8. Door Trim Units

E. If items of hardware are not definitely specified and should they be required for completion of the work, such items shall be furnished of type and quality suitable to the service required and comparable to adjacent hardware at no extra cost to the Owner.

1.2 MEASUREMENT AND PAYMENT

A. No separate payment will be made for work performed under this Section. Include the cost for this work in the lump sum Base Bid Item.

1.3 RELATED SECTIONS

A. Standard Steel Doors and Frames are included in Section 08111.

B. Fiberglass Reinforced Plastic Doors and Frames are included in Section 08220.

1.4 SUBMITTALS

A. Product Data: Submit manufacturer’s technical product data for each item of hardware in accordance with Division 1 Section "Submittals". Include whatever information may be necessary to show compliance with requirements, and include instructions for installation and for maintenance of operating parts and finish.

B. Hardware Schedule: Submit final hardware schedule in a vertical format as recognized by the Door and Hardware Institute (DHI). Horizontal schedule format will not be accepted. Coordinate hardware with doors, frames, and related work to ensure proper size, thickness, hand, function, and finish of hardware.

1. Final Hardware Schedule Content: Based on finish hardware indicated, organize hardware schedule into "hardware sets" indicating complete designations of every item required for each door or opening. Include the following information:

   a. Type, style, function, size and finish of each hardware item.

   b. Name and manufacturer of each item.

   c. Fastenings and other pertinent information.

d. Index to include location of hardware set cross referenced to indications on Drawings both on floor plans and in door and frame schedule.

e. Explanation of all abbreviations, symbols, codes, etc., contained in schedule.

f. Mounting locations for hardware.

g. Door and frame sizes and materials.

h. Keying information.

i. Wiring diagrams with theory of operation.

C. Submittal Sequence: Submit schedule in accordance to Division 1, particularly where acceptance of hardware schedule must precede fabrication of other work (e.g., hollow metal frames) which is critical in the Project construction schedule. Include with schedule the product data, samples, shop drawings of other work affected by finish hardware, and other information essential to the coordinated review of hardware schedule.

D. Keying Schedule: Submit separate detailed schedule indicating clearly how the Owner's final instructions on keying of locks has been fulfilled.

E. Samples if Requested: Prior to submittal of the final hardware schedule and prior to final ordering of finish hardware, submit one sample of each type of exposed hardware unit, finish as required, and tagged with full description for coordination with schedule.

F. Templates: Furnish hardware templates to each fabricator of doors, frames and other work to be factory prepared for the installation of hardware. Upon request, check shop drawings of such other work, to confirm that adequate provisions are made for proper location and installation of hardware.

1.5 QUALITY ASSURANCE

A. Manufacturer: Obtain each type of hardware (latch and lock sets, etc.) from a single manufacturer.

B. Supplier: A recognized architectural finish hardware supplier, with warehousing facilities, who has been furnishing hardware in the Project's vicinity for a period of not less than two years, and who is, or who employs an experienced architectural hardware consultant who is available, at reasonable times during the course of the Work, for consultation about Project's hardware requirements, to Owner, Engineer and Contractor.

C. Fire Rated Openings: Provide hardware for fire rated openings in compliance with NFPA Standard No. 80 and local building code requirements. Provide only hardware which has been tested and listed by UL or an approved testing agency for types and sizes of doors required and complies with requirements of door and door frame labels.

D. Where emergency exit devices are required on fire rated doors (with supplementary marking on doors with labels indicating "Fire Door to be Equipped with Fire Exit Hardware") provide labels on exit devices indicating "Fire Exit Hardware".

E. This supplier shall be responsible to field check existing openings for proper application of hinge and strikes sizes for all openings.

1.6 REGULATORY REQUIREMENTS

A. Regulatory Requirements

1. Conform to the 2012 International Building Code and Americans with Disabilities Act (ADA).

2. Conform to the U.L. Standards of the Underwriters Laboratories, Inc.

3. Conform to the American National Standards Institute (A.N.S.I.), A115-IG (Installation Guide for Doors and Hardware).

4. Conform to Steel Door Institute (SDI).

B. Substitutions: Requests shall be in accordance with requirements of the General Conditions of these Specifications the Project Manual. Finish hardware substitutions will

not be accepted without written approval of the Owner Engineer or the Consultant. Substituted hardware without Owner approval shall be removed and replaced with specified hardware, at no added cost to the Owner.

C. Manufacture: Unless specified otherwise, each type of finish hardware used throughout the Work shall be of the same make or manufacture, although several may be indicated as equal product complying with requirements unless otherwise specified.

D. Hardware Supplier: Supplier must be a recognized builder hardware supplier who has been furnishing hardware in the projects vicinity for a period of not less than two years. Supplier must be or employ an experienced Hardware Consultant who is available, at reasonable times during the course of the Work, for consultation about the project's hardware requirements to the Engineer or Consultant at no additional cost to the Owner.

E. Pre-scheduled Conferences: Prior to final approval of the submittals and installation of the cylinders and keys, the Contractor and Hardware Supplier shall meet in the field with the Engineer, or the Owner's authorized representative and the Consultant to finalize all finish hardware information, the keying schedules and keying requirements, and obtain final instructions in writing.

1.7 PRODUCT HANDLING

A. Tag each item or package separately, with identification related to final hardware schedule, and include basic installation instructions with each item or package.

B. Inventory hardware jointly with representatives of hardware supplier and hardware installer until each is satisfied that count is correct.

C. Deliver individually packaged hardware items at the proper times to the proper locations (shop or project site) for installation.

D. Provide secure lock up for hardware delivered to the Project, but not yet installed. Control handling and installation of hardware items which are not immediately replaceable, so that completion of the Work will not be delayed by hardware losses, both before and after installation.

1.8 GUARANTEES

A. All hardware shall be guaranteed for a period specified below of two years from date of acceptance of the Work. Correct defects in materials and workmanship and operation occurring during the guarantee period to the complete satisfaction of the Owner at no added cost to the Owner. All surface door closers shall be guaranteed for five years. Submit guaranty certification for review prior to start of Work.

1. Door Closer: Five years, except electronic closers (two years).
2. Exit Devices: Three years.
3. Hinges: 10 years.
4. All other Hardware: Two years.

1.9 CLEAN-UP

A. In addition to the requirements noted in Division 1, Contractor, upon completion of the Work of this Section, shall remove all oil, grease, or other soiling from exposed surfaces of finish hardware; shall remove all cartons, wrapping, and other debris resulting from work herein; and shall leave the building in a neat, clean, and acceptable condition to the approval of the Owner Engineer or the Consultant.

2 PRODUCTS

2.1 GENERAL

A. The following materials may be suitable or other materials maybe selected for use during the detailed design at the discretion of the Design-Builder subject to the approval of the Owner.

B. The use of a manufacturer's name and/or equipment model number is for the purpose of establishing the standard of quality and general configuration desired and is not intended as a recommendation or approval of the specific name or model number for the Design-Builder's design.

2.2 SCHEDULED HARDWARE

A. Requirements for design, grade, function, finish, size, and other distinctive qualities of each type of finish hardware are indicated in the Finish Hardware Data Sheet and Hardware Schedule at the end of this Section. Products are identified by using hardware designation numbers of the following.

B. Manufacturer's Product Designations

1. Butt Hinges: Hager
2. Continuous Hinges: Hager
3. Trim Sets: Von Duprin
4. Locksets: Schlage Lock Co.
5. Electromechanical Locks: Stanley/Best
6. Exit Devices: Von Duprin
7. Closers: Falcon
8. Automatic Door Operators: LCN Closers
9. Access Control: Sielox (provided by others)
10. Overhead Holders: Glynn-Johnson
11. Kickplates: Ives
12. Silencers: Ives
13. Floor/Wall Stops: Ives
14. Threshold and Weatherstrip: National Guard Products
15. Drip and Storm Guard: Pemko
16. Card Reader: HID Global; Irvine, CA (provided by others)

C. Obtain each type of hardware from only one manufacturer. The identification of each hardware item in the following schedules is that of the first approved manufacturers listed for the item, if not otherwise noted.

D. Provided numbers listed in the following specifications are taken from the catalogs of manufacturers listed as follows:

1. (V) Von Duprin, Inc.; Indianapolis, Indiana
2. (D) Dor-O-Matic; Hardwood Heights, Illinois
3. (R) Rockwood Manufacturing; Rockwood, Pennsylvania
4. (NG) National Guard Products; Memphis, Tennessee
5. (SC) Schlage; Brisbane, California
6. (ST) Stanley Best Access System; Indianapolis, Indiana
7. (H) Hager Companies; St. Louis, Missouri
8. (P) Pemko; Memphis, TN
9. (HID) HID Global (provided with access security control)
10. (B) Stanley: Best

2.3 MATERIALS AND FABRICATION

A. General

1. Hand of door: Drawings show direction of slide, swing or hand of each door leaf. Furnish each item of hardware for proper installation and operation of door movement as shown.
2. Manufacturer's Name Plate: Do not use manufacturer's products which have manufacturer's name or trade name displayed in a visible location (omit removable nameplates), except in conjunction with required UL labels and as otherwise acceptable to Engineer.
3. Manufacturer's identification will be permitted on rim of lock cylinders only.
4. Finish: All hardware shall receive finish as specified herein or selected by the Engineer. In general and unless otherwise shown or specified, all but hinges, locsets, exit devices, and flatware shall be stainless steel with US 32D finish. Cast item such as stops, bumpers, flush bolts, etc., shall have US 26D dull chrome finish. Those items not available in US32D or US 26D finish shall be aluminum or anodized aluminum.
5. Lockset Design: Lever handle design shall be similar to SPA as manufactured by Schlage Lock Co.
6. Fasteners: Provide hardware manufactured to conform to published templates, generally prepared for machine screw installation. Do not provide hardware which has been prepared for self tapping sheet metal screws, except as specifically indicated.
7. Furnish screws for installation, with each hardware item. Provide Phillips flat head screws except as otherwise indicated. Finish exposed (exposed under any condition) screws to match hardware finish or, if exposed in surfaces of other work, to match finish of such other work as closely as possible, including "prepared for paint" in surfaces to receive painted finish.
8. Provide concealed fasteners for hardware units which are exposed when door is closed, except to extent no standard units of type specified are available with concealed fasteners. Do not use thru bolts for installation where bolt head or nut on opposite face is exposed in other work, except where it is not feasible to adequately reinforce the Work. In such cases, provide sleeves for each thru bolt or use sex screw fasteners.
9. Tools and Maintenance Instructions for Maintenance: Furnish a complete set of specialized tools and maintenance instructions as needed for Owner's continued adjustment, maintenance, and removal and replacement of finish hardware.

2.4 HINGES, BUTTS, AND PIVOTS

A. Templates: Except for hinges and pivots to be installed entirely (both leaves) into wood doors and frames, provide only template produced units.

B. Screws: Furnish Phillips flat head or machine screws for installation of units, except furnish Phillips flat head or wood screws for installation of units into wood. Finish screw heads to match surface of hinges or pivots.

C. Hinge Pins: Except as otherwise indicated, provide hinge pins as follows:

1. Steel Hinges: Steel pins.
2. Non-ferrous Hinges: Stainless steel pins.
3. Out swing Corridor Doors: Non-removable pins.
4. Interior Doors: Non-rising pins.
5. Tips: Flat button and matching plug, finished to match leaves.
6. Number of hinges: Provide number of hinges indicated but not less than three hinges per door leaf for doors 90-in. or less in height and one additional hinge for each 30-in. of additional height.

D. Acceptable Manufacturers

1. Ives

2. McKinney
3. Hager

E. Supplier shall be responsible for the correct hinge size to fit any existing frames or doors.

F. Furnish hinges in sizes and types as required by architect’s details to achieve maximum degree of opening.

2.5 LOCK CYLINDERS AND KEYING

A. General: Supplier will meet with Owner to finalize keying requirements and obtain final instructions in writing.

B. Review the keying system with the Owner and provide the type required (master, grandmaster or great grandmaster), either new or integrated with Owner's existing system

C. Furnish Schlage Everest Restricted Patented Keyway Removable Core cylinders for all doors unless specified otherwise, keyed as directed by the Owner.

D. Furnish temporary keyed cores for the construction period, and remove these when directed. The construction cores remain property of the supplier and shall be returned to the supplier when they are removed. Contractor shall install the permanent cores in the presence of the Owner’s representative.

E. Metals: Construct lock cylinder parts from brass/bronze, stainless steel or nickel silver.

F. Comply with Owner's instructions for masterkeying and, except as otherwise indicated, provide individual change key for each lock which is not designated to be keyed alike with a group of related locks.

G. Permanently inscribe each key and cylinder with Visual Key Control that identifies cylinder manufacturer key symbol, and inscribe key with the notation "DO NOT DUPLICATE".

H. Key Material: Provide keys of nickel silver only.

I. Key Quantity

1. Furnish three change keys for each lock.
2. Three master keys for each master system.
3. One grandmaster keys for each grandmaster system.
4. One extra blank for each lock.
5. Three Control Keys (Construction and Permanent).
6. Four Construction master keys.

J. Deliver keys as directed by the Owner.

K. Key Control System: Provide a key control system including envelopes, labels tags with self-locking clips, receipt forms, three-way visible card index, and standard metal cabinet, with a capaOwner for 150 percent of the number of locks required for this Project.

1. Key cabinet and system shall be provided as a part of this contract by the hardware supplier. Cabinet shall be indexed and set up by supplier with the Owner’s representative.

2.6 LOCKS, LATCHES, AND BOLTS

A. Locks shall meet these certifications:

1. Cylindrical Locks - ANSI A156.2 Series 4000, Grade 1 Strength and Operational requirements. Meets A117.1 Accessibility Codes. Latch bolts shall be steel with minimum 1/2-in. throw, deadlocking on keyed and exterior functions; 3/4-in. throw anti-friction latchbolt on pairs of fire doors. Strikes: Provide manufacturer's standard wrought box strike for each latch or lock bolt, with curved lip extended to protect frame. Locksets to be tested to exceed 3,000,000 cycles. Lock case shall be steel. Lock shall incorporate one piece spring cage and spindle. Provide 5/8-in. minimum throw of latch and deadbolt used on pairs of doors. Provide seven-year warranty.

a. Lock design shall be Schlage L series “L9000” design – Finish to be 626.

B. Comply with UL requirements for throw of bolts and latch bolts on rated fire openings.

C. Lock Manufacturers: Subject to compliance with requirements, provide lockset products of the following approved manufacturers:

1. Schlage Lock Co., “L Series”
2. Stanley/Best Locks, 40H, Full Mortise

D. Flush Bolt Heads: Minimum of 1/2-in. diameter rods of brass, bronze or stainless steel, with minimum 12-in. long rod for doors up to 7-ft., 0-in. in height. Provide longer rods as necessary for doors exceeding 7-ft., 0-in. in height.

E. Provide dust-proof strikes for foot bolts, except where special threshold construction provides non-recessed strike for bolt.

2.7 CLOSERS AND DOOR CONTROL DEVICES

A. Where manual closers are indicated for doors required to be accessible to the physically challenged, provide adjustable units complying with ANSI A117.1 provisions for door opening force and delayed action closing.

B. Shall conform to ANSI A156.4, Grade 1, NFPA 80, NFPA 101 and UL10C.

C. Closers shall be aluminum construction with steel lever arms, independent adjusting valves for closing, latching and back check. Hydraulic regulation controlled by tamper-proof, non-critical screw valves. All closer adjustments shall be shielded by plastic cover plate after installation. Pressure relief valve, PRV, door closers will not be permitted.

D. Full rack-and-pinion type closer with full complement bearings, single piece forged piston, chrome silicon steel spring, non-critical screw valves; back check, sweep and latch.

E. Closers to be non-sized, field adjustable from size 1 to 6.

F. Furnish all large cylinder non-sized closers with minimum 1-1/2-in. diameter piston. Furnish all medium cylinder non-sized closers with minimum 1-3/8-in. diameter piston.

G. Install closers to allow maximum degree of opening, position back check to activate well in advance of the stop position to cushion the opening swing and prevent door and frame damage. Do not use door closer to stop door travel. Unless specified, install closers with through bolt mounting method on metal and wood doors. Do not through-bolt if there has been special blocking specified in the wood door specification. Coordinate with the wood door specification.

H. Available Manufacturers: Subject to compliance with requirements, manufacturers offering products that may be incorporated in the Work include:

Dor-O-Matic	Sargent	Norton
SC71	351	7501

2.8 EXIT DEVICES

A. General: All devices and mullions shall be of one manufacturer to provide for proper installation and servicing. Devices shall be furnished non handed and capable of direct field conversion for all available trim functions. All devices shall carry a three year warranty against manufacturing defects and workmanship. Exit device(s) being submitted for approval shall have been manufactured for at least 10 years. A list of 10-year-old projects using submitted exit device shall be available upon request.

1. Furnish maintenance kit VonDuprin #050046 to Owner at closeout of project.
2. Furnish mullion stabilizer similar to Von Duprin #154 for all mullions.
3. Furnish cylinders for all locking function exit devices.
4. Exit device shall be tested to ANSI/BHMA A156.3 test requirements by a BHMA certified independent testing laboratory. A written certification showing successful

completion of a minimum of 1,000,000 cycles for surface and concealed vertical rod devices; 5,000,000 cycles for rim devices; and 10,000,000 cycles for mortise devices.

5. Furnish Von Duprin exit devices with integrated exit monitor switch as required.

B. Surface-mounted/Concealed Vertical Rod Exit Devices:

1. Devices shall be push through type touch pad design with a straight or horizontal motion to eliminate pinch points. The angular motion type pad with end cavity exposed when depressed is unacceptable. Latch bolt shall have a self lubricating coating which reduces friction and wear. Plated latch bolts are unacceptable. Device housing shall be heavy duty extruded aluminum
2. Mechanism Case or Housing: Shall have an average minimum thickness of (.140-in.) EXTRUDED aluminum, and shall have the adaptability to convert from standard hex key dogging to a high security cylinder dog operation in the field.
3. No exposed screws shall be seen from the back side (pull side) of the device through a glass lite.
   a. The use of plastic parts to retract the latchbolt is unacceptable.
4. Springs: Only minimum (1/16-in.) diameter compression springs are acceptable. All internal parts shall be zinc dichromate coated to prevent rusting.
5. Quiet Feature: All devices shall incorporate a hydraulic sound damper to which decelerates the touchpad on its return stroke and eliminates noise associated with exit device operation.
6. Touch Pad: Shall be architectural metal with a minimum height of 2-3/16-in. Plastic is not acceptable.
7. Outside Trim: Shall be heavy duty type and fastened by means of concealed welded lugs and thru bolts from the inside. Lever trim shall be forged brass with a minimum average thickness on the escutcheon of (.130-in.). Plate with pull shall be minimum average thickness of (.090-in.) and have forged pulls. Lever trim shall be furnished with “Break-Away Levers” (994L Trim).
8. End caps shall be sloped and of heavy-duty metal alloy construction and provide horizontal adjustment to provide flush alignment with device cover plate. When device end cap is installed, no raised edges will protrude. End cap shall be cast metal or forged aluminum and have a minimum thickness of (.250-in.). Plastic or metal stamping will not be acceptable.
9. All devices with US28 finish to have stainless steel touch bars with US26D trim.
10. All floor strikes on interior vertical rod panic devices to be similar to Von Duprin 385A.
11. Provide all shim kits and filler plates to allow flush mounting of exit devices on all types of doors used in this Project.
12. Furnish all exit devices with deadlocking latchbolts.
13. Surface Vertical Rod Series Exit Device shall be tested to ANSI/BHMA A156.3 test requirements by a BHMA certified independent testing laboratory; a written certification showing successful completion of a minimum of 5,000,000 cycles must be provided by the independent laboratory. Rim Series Exit Device shall be tested to ANSI/BHMA A156.3 test requirements by a BHMA certified independent testing laboratory; a written certification showing successful completion of a minimum of 5,000,000 cycles must be provided by the independent laboratory. Mortise Series Exit Device shall be tested to ANSI/BHMA A156.3 test requirements by a BHMA certified independent testing laboratory; a written certification showing successful completion of a minimum of 10,000,000 cycles must be provided by the independent laboratory. Concealed Vertical Rod Series Exit Device shall be tested to ANSI/BHMA A156.3 test requirements by a BHMA certified independent testing laboratory; a written certification showing successful completion of a minimum of 1,000,000 cycles must be provided by the independent laboratory.

C. Acceptable Manufacturers: Subject to compliance with requirements, provide exit device products of the following manufacturers:

1. Von Duprin - No substitution.
2. Von Duprin – Coordinated with exit devices with integrated exit monitor switches.

2.9 DOOR TRIM UNITS

A. Fasteners: Provide manufacturer's standard exposed fasteners for door trim units (kick plates, edge trim, viewers, knockers, mail drops and similar units); either machine screws or self-tapping screws.

B. Fabricate protection plates (armor, kick or mop) not more than 1-1/2-in. less than door width on stop side and not more than 1/2-in. less than door width on pull side, x the height indicated. All protection plates shall have all edges beveled (B4E).

C. Metal Plates: Stainless steel, .050-in. (U.S. 18 ga.).

D. All pull plates and handles to be thru-bolted. Install pull plate prior to push plate to conceal thru-bolts. Provide concealed fasteners for all push/pull applications.

E. Acceptable Manufacturers

1. Ives.
2. Rockwood.
3. Quality.
4. Securitech as required at access control doors.

2.10 WEATHERSTRIP AND GASKETING

A. General: Except as otherwise indicated, provide continuous weather stripping at each leaf of every exterior door. Provide type, sizes and profiles shown or scheduled. Provide non-corrosive fasteners as recommended by manufacturer for application indicated.

B. Replaceable Seal Strips: Provide only those units where resilient or flexible seal strips is easily replaceable and readily available from stocks maintained by the manufacturer.

C. Acceptable Manufacturers

1. Pemko Mfg. Co.
2. Reese
3. National Guard Products

2.11 THRESHOLDS

A. General: Except as otherwise indicated provide standard aluminum threshold unit of type, size, and profile as shown or detailed.

B. Provide welded custom thresholds where scheduled and noted in the hardware sets. Provide cover plates where scheduled.

C. Provide thresholds that are 1-in. wider than depth of frame unless specified or detailed otherwise.

D. Acceptable Manufacturers

1. Pemko Mfg. Co.
2. Reese
3. National Guard Products

2.12 DOOR SILENCERS

A. All hollow metal frames shall have grey resilient type silencers. Quantity three on single doors, and quantity two on pairs of doors.

3 EXECUTION

3.1 INSTALLATION

A. Mount hardware units at heights indicated in "Recommended Locations for Builders Hardware for Standard Steel Doors and Frames" by the Door and Hardware Institute, except as specifically indicated or required to comply with governing regulations, and except as may be otherwise directed by Architect.

B. Install each hardware item in compliance with the manufacturer's instructions and recommendations. Wherever cutting and fitting is required to install hardware onto or into surfaces which are later to be painted or finished in another way, coordinate removal, storage and reinstallation or application of surface protections with finishing work specified in the Division 9 Sections. Do not install surface-mounted items until finishes have been completed on the substrate.

C. Set units level, plumb and true to line and location. Adjust and reinforce the attachment substrate as necessary for proper installation and operation.

D. Drill and countersink units which are not factory prepared for anchorage fasteners. Space fasteners and anchors in accordance with industry standards.

E. Set thresholds for exterior doors in full bed of butyl rubber or polyisobutylene mastic sealant.

3.2 ADJUST AND CLEAN

A. Adjust and check each operating item of hardware and each door, to ensure proper operation or function of every unit. Replace units which cannot be adjusted to operate freely and smoothly as intended for the application made.

B. Clean adjacent surfaces soiled by hardware installation.

C. Final Adjustment: Wherever hardware installation is made more than one (1) month prior to acceptance or occupancy of a space or area, return to the work during the week prior to acceptance or occupancy, and make final check and adjustment of all hardware items in such space or area. Clean operating items as necessary to restore proper function and finish of hardware and doors. Adjust door control devices to compensate for final operation of heating and ventilating equipment.

D. Instruct Owner's Personnel in proper adjustment and maintenance of hardware and hardware finishes, during the final adjustment of hardware.

E. Continued Maintenance Service: Approximately six months after the acceptance of hardware in each area, the Installer, accompanied by the representative of the latch and lock manufacturer, shall return to the Project and re adjust every item of hardware to restore proper function of doors and hardware. Consult with and instruct Owner's personnel in recommended additions to the maintenance procedures. Replace hardware items which have deteriorated or failed due to faulty design, materials or installation of hardware units. Prepare a written report of current and predictable problems (of substantial nature) in the performance of the hardware.

3.3 HARDWARE SETS

A. The following is a general listing of the minimum hardware requirements. Any item of hardware normally required by good practice, or as to meet state or local codes, shall be furnished even though it may not be specifically mentioned.

HW-1
Each to have:

(H)3	EA	HINGES	BB1191 4 ½ X 4 ½
(V)1	EA	EXIT DEVICE	99L X 996L R&V
(SC)1	EA	LOCKSET	
(SC)1	EA	CYLINDER PRIVACY	ND405 SPAR
(D)1	EA	CLOSER	SC81-STD
(H)1	EA	STOP	242F

(R)1	EA	KICK PLATE	1905 10X34.5
3	EA	SILENCERS (INSTALLED ON FRAME)	
1	EA	WALL BUMPER OR FLOOR STOP AS REQUIRED	
1	EA	PANIC THRESHOLD	

HW-2
Each to have:

(H)6	EA	HINGES	BB1191 4 ½ X 4 ½
(V)2	EA	EXIT DEVICE	99L X 996L R&V
(SC)1	EA	LOCKSET	
(SC)1	EA	CYLINDER	
(R)2	EA	FLUSH BOLT	555-12”
(D)1	EA	CLOSER	SC81-STD-FULL-H/PA
(R)1	EA	KICK PLATE	1905 10X34.5
(R)2	EA	STOPS	471
1	EA	PANIC THRESHOLD	
(NG)1	EA	WEATHERSTRIP	160V
(NG)2	EA	SWEEPS	200NA
(P)2	EA	RAIN DRIP/STORM GUARD	

HW-3
Each to have:

(H)3	EA	HINGES	BB1191 4 ½ X 4 ½
(SC)1	EA	LOCKSET	
(SC)1	EA	CYLINDER	
(D)1	EA	CLOSER	SC81-STD-FULL-H/PA
(R)1	EA	STOP	471
3	EA	SILENCERS (INSTALLED ON FRAME)	

HW-4
Each to have:

(H)3	EA	HINGES	BB1191 4 ½ X 4 ½
(SC)1	EA	LOCKSET	(Mortise Lockset and Strike)
(SC)1	EA	CYLINDER	
(D)1	EA	CLOSER	SC81-STD-FULL-H/PA
(R)1	EA	KICK PLATE	1905 10X34.5
(H)1	EA	STOP	242F
1	EA	FLUSH LATCHBOLT	
3	EA	SILENCERS (INSTALLED ON FRAME)	

HW-5
Each to have:

1	EA	OVERHEAD COILING DOOR HARDWARE FURNISHED BY DOOR MANUFACTURER.

HW-6
Each to have:

(H)3	EA	HINGES	BB1191 4 ½ X 4 ½
(D)1	EA	CLOSER	SC81-STD-FULL-H/PA
(R)1	EA	STOP	471
(R)1	EA	KICK PLATE	1905 10X34.5
3	EA	SILENCERS (INSTALLED ON FRAME)	

1	EA	WALL BUMPER OR FLOOR STOP AS REQUIRED
1	EA	PULLPLATE
1	EA	PUSHPLATE

** END OF SECTION **

SECTION 08800
GLAZING

1 GENERAL

1.1 RELATED DOCUMENTS

A. Drawings and general provisions of the Contract, including General and Supplementary Conditions and Division 1 Specification Sections, apply to this Section.

1.2 MEASUREMENT AND PAYMENT

A. No separate payment will be made for work performed under this Section. Include the cost for this work in the lump sum Base Bid.

1.3 SUMMARY

A. This Section includes glazing for the following products and applications, including those specified in other Sections where glazing requirements are specified by reference to this Section:

1. Doors.
2. Windows.

1.4 DEFINITIONS

A. Manufacturers of Glass Products: Firms that produce primary glass, fabricated glass, or both, as defined in referenced glazing publications.

B. Glass Thicknesses: Indicated by thickness designations in millimeters according to ASTM C 1036.

C. Interspace: Space between lites of an insulating glass unit that contains dehydrated air or a specified gas.

D. Deterioration of Coated Glass: Defects developed from normal use that are attributed to the manufacturing process and not to causes other than glass breakage, and practices for maintaining and cleaning coated glass contrary to manufacturer's written instructions. Defects include peeling, cracking, and other indications of deterioration in metallic coating.

E. Deterioration of Insulating Glass: Failure of hermetic seal under normal use that is attributed to the manufacturing process and not to causes other than glass breakage, and practices for maintaining and cleaning insulating glass contrary to manufacturer's written instructions. Evidence of failure is the obstruction of vision by dust, moisture, or film on interior surfaces of glass.

F. Deterioration of Laminated Glass: Defects developed from normal use that are attributed to the manufacturing process and not to causes other than glass breakage, and practices for maintaining and cleaning laminated glass contrary to manufacturer's written instructions. Defects include edge separation, delamination materially obstructing vision through glass, and blemishes exceeding those allowed by referenced laminated-glass standard.

1.5 PERFORMANCE REQUIREMENTS

A. General: Provide glazing systems capable of withstanding normal thermal movement and wind and impact loads (where applicable) without failure, including loss or glass breakage attributable to the following: defective manufacture, fabrication, and installation; failure of sealants or gaskets to remain watertight and airtight; deterioration of glazing materials; or other defects in construction.

B. Glass Design: Glass thickness designations indicated are minimums and are for detailing only. Confirm glass thicknesses by analyzing Project loads and in-service conditions. Provide glass lites in the thickness designations indicated for various size openings, but not less than thicknesses and in strengths (annealed or heat treated) required to meet or exceed the following criteria:

1. Glass Thicknesses: Select minimum glass thicknesses to comply with ASTM E 1300, according to the following requirements:
    a. Specified Design Wind Loads: As shown on Drawings.
    b. Design Wind Loads: Determine design wind loads applicable to Project from basic wind speed indicated in miles per hour (meters per second) at 33 feet (10 m) above grade, according to ASCE 7, "Minimum Design Loads for Buildings and Other Structures": Section 6.5, "Method 2-Analytical Procedure," based on mean roof heights above grade indicated on Drawings.
    c. Maximum Lateral Deflection: For the following types of glass supported on all 4 edges, provide thickness required that limits center deflection at design wind pressure to 1/50 times the short side length or 1 inch (25 mm), whichever is less, without damage.
        1) For monolithic-glass lites heat treated to resist wind loads.
        2) For insulating glass.
        3) For laminated-glass lites.
    d. Minimum Glass Thickness for Exterior Lites: Not less than 9/16 inch.
    e. Thickness of Tinted and Heat-Absorbing Glass: Provide the same thickness for each tint color indicated throughout Project.

C. Thermal Movements: Provide glazing that allows for thermal movements resulting from the following maximum change (range) in ambient and surface temperatures acting on glass framing members and glazing components. Base engineering calculation on surface temperatures of materials due to both solar heat gain and nighttime-sky heat loss.
    1. Temperature Change (Range): 120 deg F (67 deg C), ambient; 180 deg F (100 deg C), material surfaces.

D. Thermal and Optical Performance Properties: Provide glass with performance properties specified based on manufacturer's published test data, as determined according to procedures indicated below:
    1. For monolithic-glass lites, properties are based on units with lites 6.0 mm thick of thickness indicated.
    2. For laminated-glass lites, properties are based on products of construction indicated.
    3. For insulating-glass units, properties are based on units of thickness indicated for overall unit and for each lite.
    4. Center-of-Glass Values: Based on using LBL-44789 WINDOW 5.0 computer program for the following methodologies:
        a. U-Factors: NFRC 100 expressed as Btu/ft2 x h x deg F (W/m2 x K)
        b. Solar Heat Gain Coefficient: NFRC 200
        c. Solar Optical Properties: NFRC 300

1.6 SUBMITTALS

A. Product Data: For each glass product and glazing material indicated.

B. Samples: For the following products, in the form of 12-inch- (300-mm-) square Samples for glass.
    1. Each color of tinted float glass.
    2. Each type of laminated glass with colored interlayer.
    3. Insulating glass for each designation indicated.
    4. For each color (except black) of exposed glazing sealant indicated.

C. Product Certificates: Signed by manufacturers of glass and glazing products certifying that products furnished comply with requirements.

1. For solar-control low-e-coated glass, provide documentation demonstrating that manufacturer of coated glass is certified by coating manufacturer.

D. Qualification Data: For installers.

E. Product Test Reports: For each of the following types of glazing products:

1. Glazing sealants.

F. Warranties: Special warranties specified in this Section.

1.7 QUALITY ASSURANCE

A. Installer Qualifications: An experienced installer who has completed glazing similar in material, design, and extent to that indicated for this Project; whose work has resulted in glass installations with a record of successful in-service performance; and who employs glass installers for this Project who are certified under the National Glass Association's Certified Glass Installer Program.

B. Source Limitations for Glass: Obtain the following through one source from a single manufacturer for each glass type: clear float glass, coated float glass, laminated glass, glass-clad polycarbonate, and insulating glass.

C. Source Limitations for Glazing Accessories: Obtain glazing accessories through one source from a single manufacturer for each product and installation method indicated.

D. Glazing for Fire-Rated Door Assemblies: Glazing for assemblies that comply with NFPA 80 and that are listed and labeled by a testing and inspecting agency acceptable to authorities having jurisdiction, for fire-protection ratings indicated, based on testing according to NFPA 252.

E. Safety Glazing Products: Comply with testing requirements in 16 CFR 1201 and, for wired glass, ANSI Z97.1.

1. Subject to compliance with requirements, obtain safety glazing products permanently marked with certification label of the Safety Glazing Certification Council or another certification agency or manufacturer acceptable to authorities having jurisdiction.

2. Where glazing units, including Kind FT glass and laminated glass, are specified in Part 2 articles for glazing lites more than 9 ft2 (0.84 m2) in exposed surface area of one side, provide glazing products that comply with Category II materials, for lites 9 ft2 (0.84 m2) or less in exposed surface area of one side, provide glazing products that comply with Category I or II materials, except for hazardous locations where Category II materials are required by 16 CFR 1201 and regulations of authorities having jurisdiction.

F. Glazing Publications: Comply with published recommendations of glass product manufacturers and organizations below, unless more stringent requirements are indicated. Refer to these publications for glazing terms not otherwise defined in this Section or in referenced standards.

1. GANA Publications: GANA Laminated Division's "Laminated Glass Design Guide" and GANA's "Glazing Manual".

2. IGMA Publication for Insulating Glass: SIGMA TM-3000, "Glazing Guidelines for Sealed Insulating Glass Units".

1.8 DELIVERY, STORAGE, AND HANDLING

A. Protect glazing materials according to manufacturer's written instructions and as needed to prevent damage to glass and glazing materials from condensation, temperature changes, direct exposure to sun, or other causes.

1.9 PROJECT CONDITIONS

A. Environmental Limitations: Do not proceed with glazing when ambient and substrate temperature conditions are outside limits permitted by glazing material manufacturers and when glazing channel substrates are wet from rain, frost, condensation, or other causes.

1. Do not install liquid glazing sealants when ambient and substrate temperature conditions are outside limits permitted by glazing sealant manufacturer or below 40 deg F (4.4 deg C).

1.10 WARRANTY

A. Manufacturer's Special Warranty for Coated-Glass Products: Manufacturer's standard form, made out to Owner and signed by coated-glass manufacturer agreeing to replace coated-glass units that deteriorate as defined in "Definitions" Article, f.o.b. the nearest shipping point to Project site, within specified warranty period indicated below.

1. Warranty Period: 10 years from date of Substantial Completion.

B. Manufacturer's Special Warranty on Laminated Glass: Manufacturer's standard form, made out to Owner and signed by laminated-glass manufacturer agreeing to replace laminated-glass units that deteriorate as defined in "Definitions" Article, f.o.b. the nearest shipping point to Project site, within specified warranty period indicated below.

1. Warranty Period: Five years from date of Substantial Completion.

C. Manufacturer's Special Warranty on Insulating Glass: Manufacturer's standard form, made out to Owner and signed by insulating-glass manufacturer agreeing to replace insulating-glass units that deteriorate as defined in "Definitions" Article, f.o.b. the nearest shipping point to Project site, within specified warranty period indicated below.

1. Warranty Period: 10 years from date of Substantial Completion.

2 PRODUCTS

2.1 MANUFACTURERS

A. AFG Industries, INC.

B. Guardian Industries Corp.

C. PPG Industries, INC.

D. Or equal.

E. In other Part 2 articles where titles below introduce lists, the following requirements apply to product selection:

1. Basis-of-Design Product: The design for each glazing product is based on the product named. Subject to compliance with requirements, provide either the named product or a comparable product by one of the other manufacturers specified.

2.2 GLASS PRODUCTS

A. Heat-Treated Float Glass: ASTM C 1048; Type I (transparent flat glass); Quality-Q3; of class, kind, and condition indicated.

1. Fabrication Process: By horizontal (roller-hearth) process with roll-wave distortion parallel to bottom edge of glass as installed, unless otherwise indicated.

2. Provide Kind HS (heat-strengthened) float glass in place of annealed float glass where needed to resist thermal stresses induced by differential shading of individual glass lites and to comply with glass design requirements specified in Part 1 "Performance Requirements" Article.

3. For uncoated glass, comply with requirements for Condition A.

4. For coated vision glass, comply with requirements for Condition C (other uncoated glass).

5. Provide Kind FT (fully tempered) float glass in place of annealed or Kind HS (heat-strengthened) float glass where safety glass is indicated.

2.3 GLAZING SEALANTS

A. General: Provide products of type indicated, complying with the following requirements:

1. Compatibility: Select glazing sealants that are compatible with one another and with other materials they will contact, including glass products, seals of insulating-glass units, and glazing channel substrates, under conditions of service and application, as demonstrated by sealant manufacturer based on testing and field experience.
2. Suitability: Comply with sealant and glass manufacturers' written instructions for selecting glazing sealants suitable for applications indicated and for conditions existing at time of installation.
3. Colors of Exposed Glazing Sealants: As selected by Architect from manufacturer's full range.

B. Elastomeric Glazing Sealants: Comply with ASTM C 920 and other requirements indicated for each liquid-applied chemically curing sealant specified, including those referencing ASTM C 920 classifications for type, grade, class, and uses related to exposure and joint substrates.

1. Single-Component Neutral- and Basic-Curing or Neutral-Curing Silicone Glazing Sealants:
   a. Available Products:
      1) Dow Corning Corporation; 993
      2) GE Silicones; SilPruf SCS2000
      3) Tremco; Spectrem 3
   b. Type and Grade: S (single component) and NS (non-sag).
   c. Class: 50.
   d. Use Related to Exposure: NT (non-traffic).
   e. Uses Related to Glazing Substrates: M, G, A, and, as applicable to glazing substrates indicated, O.
      1) Use O Glazing Substrates: Coated glass, color anodic aluminum, aluminum coated with a high-performance coating, galvanized steel, and wood.
2. Class 25 Neutral-Curing Silicone Glazing Sealant:
   a. Available Products:
      1) Dow Corning Corporation; 797
      2) GE Silicones; UltraGlaze SSG4000
      3) GE Silicones; UltraGlaze SSG4000AC
      4) Polymeric Systems Inc.; PSI-631
      5) Schnee-Morehead, Inc.; SM5731 Poly-Glaze Plus
      6) Tremco; Proglaze SG
      7) Tremco; Spectrem 2
      8) Tremco; Tremsil 600
   b. Type and Grade: S (single component) and NS (nonsag).
   c. Class: 25.
   d. Use Related to Exposure: NT (non-traffic).
   e. Uses Related to Glazing Substrates: M, G, A, and, as applicable to glazing substrates indicated, O.
      1) Use O Glazing Substrates: Coated glass, color anodic aluminum, aluminum coated with a high-performance coating, galvanized steel, and wood.

C. Glazing Sealants for Fire-Resistive Glazing Products: Identical to products used in test assemblies to obtain fire-protection rating.

2.4 MISCELLANEOUS GLAZING MATERIALS

A. General: Provide products of material, size, and shape complying with referenced glazing standard, requirements of manufacturers of glass and other glazing materials for application indicated, and with a proven record of compatibility with surfaces contacted in installation.

B. Cleaners, Primers, and Sealers: Types recommended by sealant or gasket manufacturer.

C. Setting Blocks: Elastomeric material with a Shore, Type A durometer hardness of 85, plus or minus 5.

D. Spacers: Elastomeric blocks or continuous extrusions with a Shore, Type A durometer hardness required by glass manufacturer to maintain glass lites in place for installation indicated.

E. Edge Blocks: Elastomeric material of hardness needed to limit glass lateral movement (side walking).

F. Cylindrical Glazing Sealant Backing: ASTM C 1330, Type O (open-cell material), of size and density to control glazing sealant depth and otherwise produce optimum glazing sealant performance.

G. Perimeter Insulation for Fire-Resistive Glazing: Identical to product used in test assembly to obtain fire-resistance rating.

2.5 FABRICATION OF GLAZING UNITS

A. Fabricate glazing units in sizes required to glaze openings indicated for Project, with edge and face clearances, edge and surface conditions, and bite complying with written instructions of product manufacturer and referenced glazing publications, to comply with system performance requirements.

B. Clean-cut or flat-grind vertical edges of butt-glazed monolithic lites in a manner that produces square edges with slight kerfs at junctions with outdoor and indoor faces.

C. Grind smooth and polish exposed glass edges and corners.

2.6 LAMINATED-GLASS UNITS

A. Heat-Treated Laminated-Glass Units LG: 1 (For Interior and Exterior Doors)

1. Kind LT, consisting of two lites of fully tempered float glass.
2. Lite: 2 (tinted) float glass.
   a. Tint Color: "Azurlite" by PPG Industries, Inc., Blue-green.
   b. Kind FT (fully tempered).
   c. Thickness: 6.0 mm minimum.
3. Inner Lite: Class 1 (clear) float glass.
   a. Kind FT (fully tempered).
   b. Thickness: 6.0 mm.
4. Plastic Interlayer:
   a. Thickness: 0.060 inch (1.52 mm), but not less than that required to comply as a Type II safety glass material.
   b. Interlayer Color: Clear
5. Overall Thickness: 9/16 inch

3 EXECUTION

3.1 EXAMINATION

A. Examine framing glazing, with Installer present, for compliance with the following:

1. Manufacturing and installation tolerances, including those for size, squareness, and offsets at corners.
2. Presence and functioning of weep system.
3. Minimum required face or edge clearances.
4. Effective sealing between joints of glass-framing members.

B. Proceed with installation only after unsatisfactory conditions have been corrected.

3.2 PREPARATION

A. Clean glazing channels and other framing members receiving glass immediately before glazing. Remove coatings not firmly bonded to substrates.

3.3 GLAZING, GENERAL

A. Comply with combined written instructions of manufacturers of glass, sealants, gaskets, and other glazing materials, unless more stringent requirements are indicated, including those in referenced glazing publications.

B. Glazing channel dimensions, as indicated on Drawings, provide necessary bite on glass, minimum edge and face clearances, and adequate sealant thicknesses, with reasonable tolerances. Adjust as required by Project conditions during installation.

C. Protect glass edges from damage during handling and installation. Remove damaged glass from Project site and legally dispose of off Project site. Damaged glass is glass with edge damage or other imperfections that, when installed, could weaken glass and impair performance and appearance.

D. Apply primers to joint surfaces where required for adhesion of sealants, as determined by preconstruction sealant-substrate testing.

E. Install setting blocks in sill rabbets, sized and located to comply with referenced glazing publications, unless otherwise required by glass manufacturer. Set blocks in thin course of compatible sealant suitable for heel bead.

F. Do not exceed edge pressures stipulated by glass manufacturers for installing glass lites.

G. Provide spacers for glass lites where length plus width is larger than 50 inches (1270 mm) as follows:

1. Locate spacers directly opposite each other on both inside and outside faces of glass. Install correct size and spacing to preserve required face clearances, unless gaskets and glazing tapes are used that have demonstrated ability to maintain required face clearances and to comply with system performance requirements.
2. Provide 1/8-inch (3-mm) minimum bite of spacers on glass and use thickness equal to sealant width. With glazing tape, use thickness slightly less than final compressed thickness of tape.

H. Provide edge blocking where indicated or needed to prevent glass lites from moving sideways in glazing channel, as recommended in writing by glass manufacturer and according to requirements in referenced glazing publications.

I. Set glass lites in each series with uniform pattern, draw, bow, and similar characteristics.

J. Where wedge-shaped gaskets are driven into one side of channel to pressurize sealant or gasket on opposite side, provide adequate anchorage so gasket cannot walk out when installation is subjected to movement.

K. Square cut wedge-shaped gaskets at corners and install gaskets in a manner recommended by gasket manufacturer to prevent corners from pulling away; seal corner joints and butt joints with sealant recommended by gasket manufacturer.

3.4 SEALANT GLAZING (WET)

A. Install continuous spacers, or spacers combined with cylindrical sealant backing, between glass lites and glazing stops to maintain glass face clearances and to prevent sealant from

extruding into glass channel and blocking weep systems until sealants cure. Secure spacers or spacers and backings in place and in position to control depth of installed sealant relative to edge clearance for optimum sealant performance.

B. Force sealants into glazing channels to eliminate voids and to ensure complete wetting or bond of sealant to glass and channel surfaces.

C. Tool exposed surfaces of sealants to provide a substantial wash away from glass.

3.5 CLEANING AND PROTECTION

A. Protect exterior glass from damage immediately after installation by attaching crossed streamers to framing held away from glass. Do not apply markers to glass surface. Remove non-permanent labels, and clean surfaces.

B. Protect glass from contact with contaminating substances resulting from construction operations, including weld splatter. If, despite such protection, contaminating substances do come into contact with glass, remove substances immediately as recommended by glass manufacturer.

C. Examine glass surfaces adjacent to or below exterior concrete and other masonry surfaces at frequent intervals during construction, but not less than once a month, for buildup of dirt, scum, alkaline deposits, or stains; remove as recommended in writing by glass manufacturer.

D. Remove and replace glass that is broken, chipped, cracked, or abraded or that is damaged from natural causes, accidents, and vandalism, during construction period.

E. Wash glass on both exposed surfaces in each area of Project not more than four days before date scheduled for inspections that establish date of Substantial Completion. Wash glass as recommended in writing by glass manufacturer.

** END OF SECTION **

SECTION 09260
GYPSUM BOARD ASSEMBLIES

1 GENERAL

1.1 RELATED DOCUMENTS

A. Drawings and general provisions of the Contract, including General and Supplementary Conditions and Division 1 Specification Sections, apply to this Section.

1.2 MEASUREMENT AND PAYMENT

A. No separate payment will be made for work performed under this Section. Include the cost for this work in the lump sum Base Bid.

1.3 SUMMARY

A. This Section includes the following:

1. Interior gypsum wallboard.

B. Related Sections include the following:

1. Division 7 Section "Building Insulation" for insulation and vapor retarders installed in gypsum board assemblies.
2. Division 9 Section "Interior Painting" for primers and paint applied to gypsum board surfaces.

1.4 DEFINITIONS

A. Gypsum Board Terminology: Refer to ASTM C 11 for definitions of terms for gypsum board assemblies not defined in this Section or in other referenced standards.

1.5 SUBMITTALS

A. Product Data: For each type of product indicated.

B. Shop Drawings: Show locations, fabrication, and installation of control and expansion joints including plans, elevations, sections, details of components, and attachments to other units of Work.

C. Samples: For the following products:

1. Trim Accessories: Full-size sample in 12-inch- (300-mm-) long length for each trim accessory indicated.
2. Textured Finishes: Manufacturer's standard size for each textured finish indicated and on same backing indicated for Work.

1.6 DELIVERY, STORAGE, AND HANDLING

A. Deliver materials in original packages, containers, or bundles bearing brand name and identification of manufacturer or supplier.

B. Store materials inside under cover and keep them dry and protected against damage from weather, direct sunlight, surface contamination, corrosion, construction traffic, and other causes. Stack gypsum panels flat to prevent sagging.

1.7 PROJECT CONDITIONS

A. Environmental Limitations: Comply with ASTM C 840 requirements or gypsum board manufacturer's written recommendations, whichever are more stringent.

2 PRODUCTS

2.1 MANUFACTURERS

A. Manufacturers: Subject to compliance with requirements, provide products by one of the following:

1. Gypsum Board and Related Products:
    a. American Gypsum Co.
    b. G-P Gypsum Corp.
    c. National Gypsum Company.
    d. United States Gypsum Co.

2.2 INTERIOR GYPSUM WALLBOARD

A. Panel Size: Provide in maximum lengths and widths available that will minimize joints in each area and correspond with support system indicated.

B. Moisture- and Mold-Resistant Gypsum Board: ASTM C 1396/C 1396M. With moisture- and mold-resistant core and paper surfaces.
    1. Core: 5/8 inch, Type X
    2. Long Edges: Tapered
    3. Mold Resistance: ASTM D 3273, score of 10 as rated according to ASTM D 3274

2.3 TRIM ACCESSORIES

A. Interior Trim: ASTM C 1047.
    1. Material: Galvanized or aluminum-coated steel sheet or rolled zinc.
    2. Shapes:
        a. Corner Bead: Use at outside corners, unless otherwise indicated.
        b. LC-Bead: J-shaped; exposed long flange receives joint compound; use at exposed panel edges.
        c. L-Bead: L-shaped; exposed long leg receives joint compound; use where indicated.
        d. U-Bead: J-shaped; exposed short flange does not receive joint compound; use at exposed panel edges where indicated.
        e. Expansion (Control) Joint: Use where indicated.
        f. Curved-Edge Corner Bead: With notched or flexible flanges; use at curved openings.

B. Aluminum Trim: Extruded accessories of profiles and dimensions indicated.
    1. Manufacturers: Subject to compliance with requirements, provide products by one of the following:
        a. Fry Reglet Corp.
        b. Gordon, Inc.
        c. MM Systems Corporation.
        d. Pittcon Industries.
    2. Aluminum: Alloy and temper with not less than the strength and durability properties of ASTM B 221 (ASTM B 221M), alloy 6063-T5.
    3. Finish: Corrosion-resistant primer compatible with joint compound and finish materials specified.

2.4 JOINT TREATMENT MATERIALS

A. General: Comply with ASTM C 475.

B. Joint Tape:
    1. Interior Gypsum Wallboard: Paper

C. Joint Compound for Interior Gypsum Wallboard: For each coat use formulation that is compatible with other compounds applied on previous or for successive coats.

1. Pre-filling: At open joints, rounded or beveled panel edges, and damaged surface areas, use setting-type taping compound.
2. Embedding and First Coat: For embedding tape and first coat on joints, fasteners, and trim flanges, use drying-type, all-purpose compound.
    a. Use setting-type compound for installing paper-faced metal trim accessories.
3. Fill Coat: For second coat, use sandable drying-type, all-purpose compound.
4. Finish Coat: For third coat, use drying-type, all-purpose compound.
5. Skim Coat: For final coat of Level 5 finish, use sandable drying-type, all-purpose compound.

2.5 AUXILIARY MATERIALS

A. General: Provide auxiliary materials that comply with referenced installation standards and manufacturer's written recommendations.

3 EXECUTION

3.1 EXAMINATION

A. Examine areas and substrates, with Installer present, and including cast-in anchors and structural framing, for compliance with requirements and other conditions affecting performance. Proceed with installation only after unsatisfactory conditions have been corrected.

3.2 PREPARATION

A. Suspended Ceilings: Coordinate installation of ceiling suspension systems with installation of overhead structure to ensure that inserts and other provisions for anchorages to building structure have been installed to receive ceiling hangers at spacing required to support ceilings and that hangers will develop their full strength.
    1. Furnish concrete inserts and other devises indicated to other trades for installation in advance of time needed for coordination and construction.

3.3 APPLYING AND FINISHING PANELS, GENERAL

A. Gypsum Board Application and Finishing Standards: ASTM C 840 and GA-216.

B. Install ceiling board panels across framing to minimize the number of abutting end joints and to avoid abutting end joints in the central area of each ceiling. Stagger abutting end joints of adjacent panels not less than one framing member.

C. Install gypsum panels with face side out. Butt panels together for a light contact at edges and ends with not more than 1/16 inch (1.5 mm) of open space between panels. Do not force into place.

D. Locate edge and end joints over supports, except in ceiling applications where intermediate supports or gypsum board back-blocking is provided behind end joints. Do not place tapered edges against cut edges or ends. Stagger vertical joints on opposite sides of partitions. Do not make joints other than control joints at corners of framed openings.

E. Attach gypsum panels to steel studs so leading edge or end of each panel is attached to open (unsupported) edges of stud flanges first.

F. Attach gypsum panels to framing provided at openings and cutouts.

G. Do not attach gypsum panels across the flat grain of wide-dimension lumber, including floor joists and headers. Float gypsum panels over these members using resilient channels, or provide control joints to counteract wood shrinkage.

H. Form control and expansion joints with space between edges of adjoining gypsum panels.

I. Cover both faces of steel stud partition framing with gypsum panels in concealed spaces (above ceilings, etc.), except in chases braced internally.

1. Unless concealed application is indicated or required for sound, fire, air, or smoke ratings, coverage may be accomplished with scraps of not less than 8 ft2 (0.7 m2) in area.
2. Fit gypsum panels around ducts, pipes, and conduits.
3. Where partitions intersect open concrete coffers, concrete joists, and other structural members projecting below underside of floor/roof slabs and decks, cut gypsum panels to fit profile formed by coffers, joists, and other structural members; allow 1/4- to 3/8-inch- (6.4- to 9.5-mm-) wide joints to install sealant.

J. Isolate perimeter of non-load-bearing gypsum board partitions at structural abutments, except floors. Provide 1/4- to 1/2-inch- (6.4- to 12.7-mm-) wide spaces at these locations, and trim edges with U-bead edge trim where edges of gypsum panels are exposed. Seal joints between edges and abutting structural surfaces with acoustical sealant.

K. Space fasteners in gypsum panels according to referenced gypsum board application and finishing standard and manufacturer's written recommendations.

1. Space screws a maximum of 12 inches (304.8 mm) O.C. for vertical applications.

L. Space fasteners in panels that are tile substrates a maximum of 8 inches (203.2 mm) O.C.

3.4 PANEL APPLICATION METHODS

A. Single-Layer Application:

1. On ceilings, apply gypsum panels before wall/partition board application to the greatest extent possible and at right angles to framing, unless otherwise indicated.

B. Single-Layer Fastening Methods: Apply gypsum panels to supports with steel drill screws.

3.5 INSTALLING TRIM ACCESSORIES

A. General: For trim with back flanges intended for fasteners, attach to framing with same fasteners used for panels. Otherwise, attach trim according to manufacturer's written instructions.

B. Control Joints: Install control joints at locations indicated on Drawings and according to ASTM C 840 and in specific locations approved by Engineer for visual effect.

3.6 FINISHING GYPSUM BOARD ASSEMBLIES

A. General: Treat gypsum board joints, interior angles, edge trim, control joints, penetrations, fastener heads, surface defects, and elsewhere as required to prepare gypsum board surfaces for decoration. Promptly remove residual joint compound from adjacent surfaces.

B. Pre-fill open joints, rounded edges, and damaged surface areas.

C. Apply joint tape over gypsum board joints, except those with trim having flanges not intended for tape.

D. Gypsum Board Finish Levels: Finish panels to levels indicated below, according to ASTM C 840, for locations indicated:

1. Level 1: Embed tape at joints in ceiling plenum areas, concealed areas, and where indicated, unless a higher level of finish is required for fire-resistance-rated assemblies and sound-rated assemblies.
2. Level 2: Embed tape and apply separate first coat of joint compound to tape, fasteners, and trim flanges where panels are substrate for tile and where indicated.
3. Level 4: Embed tape and apply separate first, fill, and finish coats of joint compound to tape, fasteners, and trim flanges at panel surfaces that will be exposed to view at typical area, unless otherwise indicated.

E. Cementitious Backer Units: Finish according to manufacturer's written instructions.

3.7 FIELD QUALITY CONTROL

A. Above-Ceiling Observation: Before Contractor installs gypsum board ceilings, Engineer will conduct an above-ceiling observation and report deficiencies in the Work observed. Do not

proceed with installation of gypsum board to ceiling support framing until deficiencies have been corrected.

1. Notify Engineer seven days in advance of date and time when Project, or part of Project, will be ready for above-ceiling observation.
2. Before notifying Engineer, complete the following in areas to receive gypsum board ceilings:
    a. Installation of 80 percent of lighting fixtures, powered for operation.
    b. Installation, insulation, and leak and pressure testing of water piping systems.
    c. Installation of air-duct systems.
    d. Installation of air devices.
    e. Installation of mechanical system control-air tubing.
    f. Installation of ceiling support framing.

** END OF SECTION **

SECTION 09511
ACOUSTICAL PANEL CEILINGS

1 GENERAL

1.1 RELATED DOCUMENTS

A. Drawings and general provisions of the Contract, including General and Supplementary Conditions and Division 1 Specification Sections, apply to this Section.

1.2 MEASUREMENT AND PAYMENT

A. No separate payment will be made for work performed under this Section. Include the cost for this work in the lump sum Base Bid.

1.3 SUMMARY

A. This Section includes acoustical panels and exposed suspension systems for ceilings.

B. Products furnished, but not installed under this Section, include anchors, clips, and other ceiling attachment devices to be cast in concrete at ceilings.

1.4 DEFINITIONS

A. AC: Articulation Class.

B. CAC: Ceiling Attenuation Class.

C. LR: Light Reflectance coefficient.

D. NRC: Noise Reduction Coefficient.

1.5 SUBMITTALS

A. Product Data: For each type of product indicated.

B. Coordination Drawings: Reflected ceiling plans, drawn to scale, on which the following items are shown and coordinated with each other, based on input from installers of the items involved:

1. Ceiling suspension system members.
2. Method of attaching hangers to building structure.
3. Ceiling-mounted items including lighting fixtures, diffusers, grilles, speakers, sprinklers, access panels, and special moldings.
4. Minimum Drawing Scale: 1/8 inch = 1 foot (1:96).

C. Samples for Initial Selection: For components with factory-applied color finishes.

D. Qualification Data: For testing agency.

E. Field quality-control test reports.

F. Maintenance Data: For finishes to include in maintenance manuals.

1.6 QUALITY ASSURANCE

A. Acoustical Testing Agency Qualifications: An independent testing laboratory, or an NVLAP-accredited laboratory, with the experience and capability to conduct the testing indicated. NVLAP-accredited laboratories must document accreditation, based on a "Certificate of Accreditation" and a "Scope of Accreditation" listing the test methods specified.

B. Source Limitations:

1. Acoustical Ceiling Panel: Obtain each type through one source from a single manufacturer.
2. Suspension System: Obtain each type through one source from a single manufacturer.

C. Fire-Test-Response Characteristics: Provide acoustical panel ceilings that comply with the following requirements:

1. Surface-Burning Characteristics: Provide acoustical panels with the following surface-burning characteristics complying with ASTM E 1264 for Class A materials as determined by testing identical products per ASTM E 84:

a. Smoke-Developed Index: 50 or less.

1.7 DELIVERY, STORAGE, AND HANDLING

A. Deliver acoustical panels, suspension system components, and accessories to Project site in original, unopened packages and store them in a fully enclosed, conditioned space where they will be protected against damage from moisture, humidity, temperature extremes, direct sunlight, surface contamination, and other causes.

B. Before installing acoustical panels, permit them to reach room temperature and a stabilized moisture content.

C. Handle acoustical panels carefully to avoid chipping edges or damaging units in any way.

1.8 PROJECT CONDITIONS

A. Environmental Limitations: Do not install acoustical panel ceilings until spaces are enclosed and weatherproof, wet work in spaces is complete and dry, work above ceilings is complete, and ambient temperature and humidity conditions are maintained at the levels indicated for Project when occupied for its intended use.

1. Pressurized Plenums: Operate ventilation system for not less than 48 hours before beginning acoustical panel ceiling installation.

1.9 COORDINATION

A. Coordinate layout and installation of acoustical panels and suspension system with other construction that penetrates ceilings or is supported by them, including light fixtures, HVAC equipment, fire-suppression system, and partition assemblies.

1.10 EXTRA MATERIALS

A. Furnish extra materials described below that match products installed and that are packaged with protective covering for storage and identified with labels describing contents.

1. Acoustical Ceiling Panels: Full-size panels equal to 2.0 percent of quantity installed.

2. Suspension System Components: Quantity of each exposed component equal to 2.0 percent of quantity installed.

2 PRODUCTS

2.1 ACOUSTICAL PANELS

A. Acoustical Panels: Armstrong Ultima 1910, or equal.

B. Material: Wet-formed mineral fiber with acoustically transparent membrane.

C. Surface Finish: White, vinyl latex paint

D. Fire Performance

1. ASTM E84

2. Flame Spread Index: 25 or less

3. Smoke Developed Index: 50 or less

E. Classification: ASTM E1264, Form 2, Pattern E, Fire Class A

F. Color: White, vinyl latex paint.

G. LR: Minimum 0.90.

H. NRC: Minimum 0.75

I. CAC: Minimum 35

J. Edge/Joint Detail: Square.

K. Thickness: ¾”

L. Modular Size: 24”x24”

M. Antimicrobial Treatment: Broad spectrum fungicide and bactericide based.

N. Sag Resistance: Humiguard Plus, or equal

2.2 METAL SUSPENSION SYSTEM FOR ACOUSTICAL PANEL CEILING

A. Suspension System: Armstrong Prelude XL, or equal

B. Material: Hot dipped galvanized steel

C. Surface Finish: Baked polyester

D. Color: White

E. Face Dimension: 15/16”

F. Profile: Exposed tee

G. Cross Tee/Main Beam Interface: Override

H. End Detail

1. Main Beam: Staked-on clip
2. Cross Tee: Staked-on clip

I. Duty Classification: Heavy duty

J. Hanger Wire

1. Zinc-Coated, Carbon-Steel Wire in accordance with ASTM A641/A641M, Class 1 zinc coating, soft temper.
2. Select wire diameter so its stress at 3 times hanger design load (ASTM C635, Table 1, "Direct Hung") will be less than yield stress of wire; however, wire diameter shall not be less than 0.106-inches.

3 EXECUTION

3.1 EXAMINATION

A. Examine substrates, areas, and conditions, including structural framing to which acoustical panel ceilings attach or abut, with Installer present, for compliance with requirements specified in this and other Sections that affect ceiling installation and anchorage and with requirements for installation tolerances and other conditions affecting performance of acoustical panel ceilings.

1. Proceed with installation only after unsatisfactory conditions have been corrected.

3.2 PREPARATION

A. Measure each ceiling area and establish layout of acoustical panels to balance border widths at opposite edges of each ceiling. Avoid using less-than-half-width panels at borders, and comply with layout shown on reflected ceiling plans.

3.3 INSTALLATION

A. General: Install acoustical panel ceilings to comply with ASTM C636 and UBC Standard 25-2 and seismic design requirements indicated, per manufacturer's written instructions and CISCA's "Ceiling Systems Handbook."

B. Suspend ceiling hangers from building's structural members and as follows:

1. Install hangers plumb and free from contact with insulation or other objects within ceiling plenum that are not part of supporting structure or of ceiling suspension system.

2. Splay hangers only where required to miss obstructions; offset resulting horizontal forces by bracing, countersplaying, or other equally effective means.
3. Splay hangers only where required to miss obstructions; offset resulting horizontal forces by bracing, countersplaying, or other equally effective means.
4. Where width of ducts and other construction within ceiling plenum produces hanger spacings that interfere with location of hangers at spacings required to support standard suspension system members, install supplemental suspension members and hangers in form of trapezes or equivalent devices.
5. Secure wire hangers to ceiling suspension members and to supports above with a minimum of three tight turns. Connect hangers directly either to structures or to inserts, eye screws, or other devices that are secure and appropriate for substrate and that will not deteriorate or otherwise fail due to age, corrosion, or elevated temperatures.
6. Secure flat, angle, channel, and rod hangers to structure, including intermediate framing members, by attaching to inserts, eye screws, or other devices that are secure and appropriate for both structure to which hangers are attached and type of hanger involved. Install hangers in a manner that will not cause them to deteriorate or fail due to age, corrosion, or elevated temperatures.
7. Do not support ceilings directly from permanent metal forms or floor deck. Fasten hangers to cast-in-place hanger inserts, post-installed mechanical or adhesive anchors, or power-actuated fasteners that extend through forms into concrete.
8. When steel framing does not permit installation of hanger wires at spacing required, install carrying channels or other supplemental support for attachment of hanger wires.
9. Do not attach hangers to steel deck tabs, or thin angles on bottom cord of bar joists.
10. Do not attach hangers to steel roof deck. Attach hangers to structural members.
11. Space hangers not more than 48 inches (1200 mm) o.c. along each member supported directly from hangers, unless otherwise indicated; provide hangers not more than 8 inches (200 mm) from ends of each member.
12. Size supplemental suspension members and hangers to support ceiling loads within performance limits established by referenced standards and publications.

C. Secure bracing wires to ceiling suspension members and to supports with a minimum of four tight turns. Suspend bracing from building's structural members as required for hangers, without attaching to permanent metal forms, steel deck, or steel deck tabs. Fasten bracing wires into concrete with cast-in-place or post-installed anchors.

D. Install edge moldings and trim of type indicated at perimeter of acoustical ceiling area and where necessary to conceal edges of acoustical panels.
   1. Apply acoustical sealant in a continuous ribbon concealed on back of vertical legs of moldings before they are installed.
   2. Screw attach moldings to substrate at intervals not more than 16 inches (400 mm) o.c. and not more than 3 inches (75 mm) from ends, leveling with ceiling suspension system to a tolerance of 1/8 inch in 12 feet (3.2 mm in 3.6 m). Miter corners accurately and connect securely.
   3. Do not use exposed fasteners, including pop rivets, on moldings and trim.

E. Install suspension system runners so they are square and securely interlocked with one another. Remove and replace dented, bent, or kinked members.

F. Install acoustical panels with undamaged edges and fit accurately into suspension system runners and edge moldings. Scribe and cut panels at borders and penetrations to provide a neat, precise fit.
   1. Arrange directionally patterned acoustical panels as follows:
      a. As indicated on reflected ceiling plans.

b. Install panels with pattern running in one direction parallel to short axis of space.

2. For square-edged panels, install panels with edges fully hidden from view by flanges of suspension system runners and moldings.

3.4 FIELD QUALITY CONTROL

A. Special Inspections: Engage a qualified special inspector to perform the following special inspections and prepare reports:

1. Suspended ceiling system.

2. Hangers, anchors and fasteners.

B. Testing Agency: Engage a qualified testing agency to perform tests and inspections and prepare test reports.

C. Tests and Inspections: Testing and inspecting of completed installations of acoustical panel ceiling hangers and anchors and fasteners shall take place in successive stages, in areas of extent and using methods as follows. Do not proceed with installations of acoustical panel ceiling hangers for the next area until test results for previously completed installations of acoustical panel ceiling hangers show compliance with requirements.

1. Extent of Each Test Area: When installation of ceiling suspension systems on each floor has reached 20 percent completion but no panels have been installed.

a. Within each test area, testing agency will select 1 of every 10 power-actuated fasteners and post-installed anchors used to attach hangers to concrete and will test them for 200 lbf (890 N) of tension; it will also select one of every 2 post-installed anchors used to attach bracing wires to concrete and will test them for 440 lbf (1957 N) of tension.

b. When testing discovers fasteners and anchors that do not comply with requirements, testing agency will test those anchors not previously tested until 20 pass consecutively and then will resume initial testing frequency.

D. Remove and replace acoustical panel ceiling hangers and anchors and fasteners that do not pass tests and inspections and retest as specified above.

3.5 CLEANING

A. Clean exposed surfaces of acoustical panel ceilings, including trim, edge moldings, and suspension system members. Comply with manufacturer's written instructions for cleaning and touchup of minor finish damage. Remove and replace ceiling components that cannot be successfully cleaned and repaired to permanently eliminate evidence of damage.

** END OF SECTION **

SECTION 10522
FIRE EXTINGUISHERS AND ACCESSORIES

1 GENERAL

1.1 SCOPE OF WORK

A. Furnish all labor, materials, equipment and incidentals required and install fire extinguishers with brackets and accessories as shown on the Drawings and as specified herein.

1.2 SUBMITTALS

A. The Contractor shall submit shop drawing and product data to the Engineer in accordance with the requirements of Section 01300, Submittals.

1.3 OPERATION AND MAINTENANCE DATA

A. The contractor shall provide operation and maintenance data in accordance with the requirements of Section 01730, Operating and Maintenance Data.

1.4 STORAGE AND PROTECTION

A. Equipment shall be stored and protected in accordance with Section 01620, Storage and Protection.

1.5 QUALITY CONTROL

A. Fire extinguishers shall be Underwriters Laboratories (UL) approved.

2 PRODUCTS

2.1 MANUFACTURERS

A. Acceptable manufacturers include:

1. J.L. Industries
2. Kidde
3. Or equal

2.2 GENERAL

A. Fire extinguishers shall be tri-class chemical fire extinguishers with drawn aluminum or steel cylinder, squeeze handle with locking pin, nozzle assembly with pressure gauge, and heavy duty corrosion resistant wall bracket suitable for use in a vibrating environment.

B. Fire extinguishers shall be suitable for operation over a temperature range of -40°C to +120°C.

2.3 FIRE EXTINGUISHERS

A. Fire extinguishers located in the administration building shall be rated minimum 2A, 20B:C and shall be charged with 6 pounds of ammonium phosphate.

B. All other fire extinguishers shall be rated minimum 4A, 60B:C and shall be charged with 10 pounds of ammonium phosphate.

2.4 IDENTIFYING SIGNS

A. See Section 10400, Signage.

3 EXECUTION

3.1 INSTALLATION

A. Fire extinguishers and brackets shall be installed at the locations shown and as directed.

B. Mount brackets 4’-6” above finished floor with expansion bolts into masonry.

C. All fire extinguishers shall be inspected and certified within 30 days of start-up.

** END OF SECTION **

SECTION 10650
BATHROOM ACCESSORIES

1 GENERAL

1.1 SCOPE

A. Work covered by this section includes furnishing all materials, labor, and equipment required to furnish and install restroom accessories as specified herein and/or shown on the Drawings.

1.2 SUBMITTALS

A. Submit complete shop drawings and engineering data in accordance with the requirements of Section 01300, Submittals.

1.3 PRODUCT DELIVERY AND STORAGE

A. Accessories shall be stored and protected in accordance with the requirements of Section 01620, Storage and Protection.

2 PRODUCTS

2.1 MANUFACTURERS

A. Approved manufacturers include:

1. Bradley Corporation
2. Bobrick Washroom Equipment, Inc.
3. Or equal

2.2 TOWEL DISPENSER/WASTE RECEPTACLE

A. Towel dispenser/waste receptacle shall be semi-recessed type, Bradley Model 2017-10, or equal.

B. Install one (1) towel dispenser/waste receptacle in each bathroom.

2.3 MIRROR

A. Mirror shall be 24-inch wide by 36-inch high fixed tilt frame mirror, Bradley Model 740, or equal.

B. Install one (1) mirror over each sink.

2.4 SHELF

A. Six-inch deep surface mounted shelf shall be Bradley Model 756, or equal.

B. Install one (1) shelf over each sink.

2.5 SOAP DISPENSER

A. Surface mounted liquid soap dispenser shall be Bradley Model 6562, or equal.

B. Install one (1) soap dispenser at each sink. Adjacent sinks can have one dispenser located in between the sinks.

2.6 TOILET TISSUE DISPENSER

A. Toilet tissue dispenser shall be surface-mounted, hinged hood, single roll toilet tissue dispenser, Bradley Model 5106, or equal.

B. Install one (1) toilet tissue dispenser at each toilet.

2.7 GRAB BARS

A. Grab bars with standard finish shall be Bradley Model 812, or equal.

B. Install two (2) at each ADA toilet.

3 EXECUTION

3.1 INSTALLATION

A. Contractor shall install bathroom accessories in accordance with manufacturer's written instructions.

B. Dented materials shall be replaced.

** END OF SECTION **

SECTION 12121
PRE-ENGINEERED METAL BUILDING

1 GENERAL

1.1 DESCRIPTION

A. This section includes materials, installation, and manufacturer's design of prefabricated metal buildings.

1.2 SUBMITTALS

A. Submit shop drawings in accordance with the General Conditions, Section 01300, and the following:

B. Submit letter of certification identifying the metal building manufacturer is IAS (AC472) certified fabricator and that all building components will be designed in accordance with the current edition of the IBC Building Code.

C. Submit certification that the metal building manufacturer has been in business for at least 10 years and has designed and supplied at least five buildings similar to the specified project building. Include names of owners and locations for the referenced buildings.

D. Submit manufacturer's catalog data describing the building construction and components. Submit project-specific design and erection drawings, shop painting and finishing specifications, instruction manuals, and other data to describe the design, materials, sizes, layouts, construction details, fasteners, and erection.

E. Submit engineering design calculations for structural members and covering components, bracing, equipment supports, and anchor bolts. Submit the stress values utilized in the analysis stating the design criteria and procedures used. Design calculations shall be signed by a professional engineer registered in the state of Georgia.

F. Submit certificate that the design meets the specified building codes.

G. Submit erection drawings and diagrams for each building. Submit calculations verifying the base anchor/foundation assemblies indicated in the drawings are adequate to accommodate the project-specific metal building reactions. Show column base anchor details and anchor bolt sizes. Show roof and wall bracing.

H. Submit color charts of the colors available for wall and roof panels, however, contract to include the cost to custom color match owners' preferred color for exterior wall panels.

1.3 GUARANTEE

A. Buildings shall be guaranteed against water leaks arising out of or caused by ordinary wear and tear by the elements for a period of five years. Such guarantee is in addition to the guarantee required in the General Conditions and shall start upon final acceptance of the work by the Owner.

B. Special Warranty on Metal Panel Finishes: Manufacturer's standard form in which manufacturer agrees to repair finish or replace metal panels that show evidence of deterioration of factory-applied finishes within specified warranty period, ABC Standard.

C. Finish Warranty Period: 20 years from date of Substantial Completion.

2 MATERIALS

2.1 MANUFACTURERS

A. Prefabricated metal buildings shall be manufactured by American Buildings, Butler, Premier, Vulcan Steel Structures, Inc., Varco-Pruden, or approved equal.

2.2 DESIGN CRITERIA

A. Buildings shall be of the size and shape shown, complete with all accessories.

B. The design of the building and components shall be in accordance with Metal Building Manufacturer's Association's "Recommended Design Practices Manual," latest edition, and the IBC Building Code.

C. Design building for the dead load, specified live load, and the combinations of these loads as specified below. Reduction of loads due to tributary loaded area is permitted only for the rigid frames. Include the following loads in addition to the dead load:

1. Roof live load 20 psf. Upper floor mezzanine live load of 125 psf.
2. A uniform collateral load of 5 psf in addition to the dead load of the building at roof and upper floor mezzanine.
3. Weights of mechanical equipment and process piping supported by the structure if greater than 8 psf.
4. Wind load per the IBC requirements supplemented by ASCE 7-10: See Drawings.

D. Rigid frame shall consist of welded up plate section columns and beams complete with necessary splice plates for bolted field assembly.

E. End rigid frames shall be the same as interior rigid frames.

F. Design structural steel members in accordance with AISC publication, "Specification for the Design, Fabrication, and Erection of Structural Steel for Buildings." Design structural cold-formed steel framing members in accordance with AISI publication, "Specification for the Design of Cold-Formed Steel Structural Members."

G. Purlins and Girts shall be 8 in. minimum deep “Z” sections, precision roll formed.

H. Eve struts shall be 8in. minimum deep “C” sections.

I. All columns shall be designed as “Pin” connected. Moment transfer to footings will not be allowed.

J. The building foundation plan is a preliminary design, the foundation design will be reviewed by the engineer once the Prefabricated Metal Building submittal is approved.

K. Design framed openings to replace structurally the covering and framing displaced.

L. Welding of steel shall be in accordance with AWS D1.1.

M. Except as modified hereinafter, design steel covering in accordance with AISI publication "Specification for the Design of Cold-Formed Steel Structural Members."

N. Maximum wind load deflection for Primary Framing shall not exceed 1/60 of the eave height of the building.

O. Maximum wind load deflection for wall sheets shall not exceed 1/180 of the span between supports, and maximum live load deflection for roof sheets shall not exceed 1/180 of the span between supports. Maximum deflections shall be based on sheets continuous across two or more supports with sheets unfastened and fully free to deflect.

2.3 BRACING

A. Provide roof bracing. Design bracing for controlling wind or seismic load combinations. Brace compression flanges of structural members as required by the code.

2.4 ASSEMBLY AND DISASSEMBLY

A. The size of the prefabricated components and the field connections required for erection shall permit easy assembly and disassembly by means of the building manufacturer's standard fasteners and construction tools. The maximum size of any shop-assembled component of the building shall permit transportation from factory to site by commercial carrier.

B. Clearly and legibly mark each and every piece and part of the assembly to correspond with previously prepared erection drawings, diagrams, and/or instruction manuals.

2.5 EXTERIOR COVERING COMPONENTS--STEEL

A. Roof Covering shall be standing seam with minimum 26-gauge Galvalume steel sheeting conforming to ASTM A792, factory color finished. Panels shall have 2 major corrugations, 2 inches high not exceeding 24 inches.

B. Wall Covering shall be rib panel with minimum 26-gauge Galvalume steel conforming to ASTM A792, Galvalume, factory color finished.

2.6 ACCESSORIES

A. Flashing, trim, metal closure strips, caps, and similar metal accessories shall be not less than the minimum thicknesses specified for covering. Molded closure strips shall be bituminous-saturated fiber, closed-cell or solid-cell synthetic rubber or neoprene, or PVC premolded to match configuration of the covering.

2.7 DISSIMILAR METAL ISOLATION

A. Coat steel in contact with aluminum or aluminum-coated steel covering or provide rubber or nylon gaskets between steel and aluminum surfaces.

2.8 FASTENERS

A. All structural framing shall utilize high-strength (H-S) bolts. H-S bolts, nuts, and washers shall conform to ASTM A325, Type 1 galvanized, ASTM A563, and ASTM F436, respectively. All hardware shall be galvanized.

B. Provide gasketed washers of a material compatible with the covering and with a minimum diameter of 3/8 inch for structural connections to waterproof the fastener penetration on the exterior side. Gasketed portion of washers shall be neoprene or other equally durable elastomeric material approximately 1/8 inch thick. Exposed wall fasteners shall be factory color finished or provided with plastic color caps to match the covering.

2.9 PAINTING OF ROOF PANELS

A. Color finish roof covering at the factory on both sides. Prepare surfaces for coating by thoroughly cleaning, pretreating, and priming (if required by the finish coat) to provide a film that is compatible with the metal surface and the color finish. Treat galvanized steel surfaces per DOD-P-15328D. Clean surfaces of oil, grease, loose scale, and other foreign substances. Prime coat shall be in accordance with the manufacturer's standard system.

B. Color finish shall consist of a Kynar 500/Hylar 5000 fluoropolymer coating.

C. Dry-film coating thickness of the color coat shall be not less than 1.0 mil for exterior and interior surface finish. The exterior and interior finishing systems shall meet the quality standards specified in The Aluminum Association publication, "Aluminum Standards and Data," except that for salt spray resistance, exposure shall be 450 hours, and maximum undercutting from the scored line shall not exceed 1/8 inch.

D. Color shall match the color scheme at the existing project site.

2.10 FINISH OF GIRTS, PURLINS, BEAMS, COLUMNS, BRACING, AND EAVE STRUT

A. Rigid frames and rod bracing shall be hot dipped-galvanized in accordance to ASTM A123

B. Secondary framing (Girts, Purlins, eave strut, etc) shall be galvanized with a G90 designation according to ASTM A653.

2.11 SEALANT

A. Provide sealant of the type recommended by the building manufacturer at each joint.

2.12 SPARE PARTS

A. Provide a minimum of 5% excess over the required amount of nuts, bolts, screws, washers, and other required fasteners with each building. Provide separate boxes for the parts for each building. Label each box with the name of the building to which it pertains; the building manufacturer's name; and the local representative's name, address, and telephone number. Provide individual boxes for each item (nuts, bolts, washers, etc.).

3 EXECUTION

3.1 STORAGE AND PROTECTION

A. Deliver, store, handle, and erect prefabricated components, sheets, panels, and other manufactured items such that they will not be damaged or deformed. Stock materials stored on the site before erection on platforms or pallets and cover with tarpaulins or other weathertight covering. Store metal sheets or panels so that water will drain off. Upon arrival on the jobsite, remove moisture on sheets and panels, restack, and protect until used.

B. Do not store the sheets or panels in contact with materials that might cause staining. Remove stained, discolored, or damaged sheets from the site.

3.2 ERECTION

A. Determine anchor bolt layouts before pouring concrete footings, walls, or slabs to support the buildings.

B. Erect in accordance with the manufacturer's erection instructions and drawings and the requirements herein. Plug improper or improperly located drill holes with an oversize screw fastener and gasketed washers. Do not use sheets with an excess of such holes or with such holes in critical locations. Keep exposed surfaces clean and free from sealant, metal cuttings, and other foreign materials.

C. Accurately set anchor bolts by template while the concrete is in a plastic state. Provide uniform bearing under baseplates and sill members using nonshrink grout. Accurately space members to assure proper fitting of covering. As erection progresses, securely fasten the work and brace to resist vertical loads and horizontal wind or earthquake loads.

D. Apply wall covering with the longitudinal configurations in the vertical position. Apply roof covering with the longitudinal configurations in the direction of the roof slope.

E. Except for self-framing buildings, make end laps over framing members with fasteners into framing members approximately 2 inches from the end of the overlapping sheet. Side lap distances, end lap distances, joint sealing, and spacing of fasteners shall be in accordance with the manufacturer's standard practice insofar as the maximum fastener spacing specified is not exceeded and provided such standard practice will result in a structure that will be free from water leaks and meet design requirements.

F. Spacing of fasteners shall present an orderly appearance and shall not exceed 8 inches on center at end laps of covering, 12 inches on center at connection of covering to intermediate supports, 12 inches on center at side laps of roof coverings, and 18 inches on center at side laps of wall covering. Install fasteners in straight lines within a tolerance of 1/2 inch in the length of a bay.

G. Seal side laps and end laps of roof and wall covering and joints at accessories. Drive fasteners normal to the surface and to a uniform depth to properly seat the gasketed washers. Fasten accessories into framing members.

H. Insulate incompatible dissimilar materials that are in contact by means of gaskets or insulating compounds.

3.3 FIELD PAINTING

A. Touch up galvanized coated surfaces with a heavy coat of zinc-rich touch-up paint.

** END OF SECTION **

SECTION 15095
VALVES, HYDRANTS, APPURTENANCES AND STORM PIPE

1 GENERAL

1.1 DESCRIPTION

A. Provide and test valves, hydrants and miscellaneous piping appurtenances as indicated and specified. Sizes and capacities indicated or specified.

1.2 SUBMITTALS

A. Submit the following in accordance with Section 01300:

1. Manufacturer's specifications, catalog data, descriptive matter, illustrations, certified shop drawings, wiring and diagrams.
2. Data regarding valve characteristics and performance.
3. Shop drawing data for accessory items.
4. Manufacturer's literature as needed to supplement data.
5. Operating and maintenance manuals in accordance with Section 01730.
6. Recommended spare parts other than those specified.

2 PRODUCTS

2.1 DUCTILE IRON PIPE

A. Ductile iron pipe shall be designed and manufactured in accordance with ANSI/AWWA C150/A21.50 and ANSI/AWWA C151/A21.51.

B. Ductile iron used to manufacture ductile iron pipe shall meet the following minimum physical properties.

1. Minimum Tensile Strength – 60,000 PSI
2. Minimum Yield Strength – 42,000 PSI
3. Minimum Elongation – 10 percent

C. Ductile iron pipe shall be Pressure Class 350 in accordance with ANSI/AWWA C150/A21.50.

D. Joints

1. Non-Restrained Joints
   a. Push-on joints in accordance with ANSI/AWWA C111/A21.11.
2. Restrained Joints
   a. Flex-Ring joints by American Cast Iron Pipe Company
   b. TR Flex joints by U.S. Pipe and Foundry Company
   c. Owner Approved Equal

E. Gaskets

1. Plain rubber gasket in accordance with ANSI/AWWA C111/A21.11.

F. Coatings

a. Interior
   1) Asphaltic coating in accordance with ANSI/AWWA C104/A21.04.
b. Exterior
   1) Asphaltic coating in accordance with ANSI/AWWA C151/A21.51.

G. Acceptable manufacturers of ductile iron pipe and fittings:

1. American Cast Iron Pipe Company
2. U.S. Pipe and Foundry Company
3. Owner Approved Equal

2.2 DUCTILE IRON FITTINGS

A. Standard ductile iron fittings shall be designed and manufactured in accordance with ANSI/AWWA C110/A21.10.

B. Compact ductile iron fittings shall be designed and manufactured in accordance with ANSI/AWWA C153/A21.53.

C. Ductile iron used to manufacture ductile iron fittings shall meet the following minimum physical properties.

1. Minimum Tensile Strength – 70,000 PSI
2. Minimum Yield Strength – 50,000 PSI
3. Minimum Elongation – 5 percent

D. Joints

1. Buried Fittings
   a. Mechanical joints in accordance with ANSI/AWWA C111/A21.11.
   b. Mechanical joints that require restraining shall be restrained with wedge type mechanical joint retainer glands for ductile iron pipe. Retainer glands shall be manufactured from high strength ductile iron in accordance with ASTM A536, Grade 65-45-12. Retainer gland dimensions shall be in accordance with ANSI/AWWA C111/A21.11 or ANSI/AWWA C153/A21.53.
   c. Acceptable manufacturers of retainer glands:
      1) Mega-Lug Series 1100
      2) Sigma ONE-LOK Series D-SLDE
      3) Uni-Flange Series 1400
      4) Owner Approved Equal
2. Above Grade (Non-Buried) Fittings:
   a. Flanged joints in accordance with ANSI/AWWA C110/A21.10.

E. Gaskets

1. Mechanical Joints
   a. Plain rubber mechanical joint gasket in accordance with ANSI/AWWA C111/A21.11.
2. Flanged Joints
   a. Full face, 1/8” thick, gasket with bulb-type ring(s).
   b. Gaskets shall meet the dimensions of ANSI/AWWA C115/A21.15.
3. Hardware
   a. Mechanical Joints
      1) Bolts shall be low carbon steel, zinc plated, tee-head bolts in accordance with ANSI/AWWA C111/A21.11.
      2) Nuts shall be low carbon steel, zinc plated in accordance with ANSI/AWWA C111/A21.11.
   b. Flanged Joints
      1) Bolts shall be heavy hex type, low carbon steel, zinc plated in accordance with ASTM A307, Grade B.

2) Nuts shall be heavy hex type, low carbon steel, zinc plated in accordance with ASTM A563, Grade A.

3) Washers shall be SAE flat washers, low carbon steel, zinc plated in accordance with ASTM F844.

4. Coatings

a. Buried Fittings

1) Interior

a) Asphaltic coating in accordance with ANSI/AWWA C104/A21.04.

2) Exterior

a) Asphaltic coating in accordance with ANSI/AWWA C151/A21.51.

F. All ductile iron pipe and fittings used on a project shall be new and shall be the product of a single manufacturer, unless otherwise approved by the Owner.

2.3 IPEX TUBING

1. Tubing: IPEX Q-Line Composite Tubing

a. Water service tubing shall be composite PE-AL-PE tubing manufactured in accordance with the requirements of AWWA C903 and certified to CSA B137.9 and ASTM F1282. It shall have a long term pressure rating of 1380kPa at 23ºC (200 psi at 73ºF) and 690kPa at 82ºC (100 psi at 180ºF).

b. The pipe shall be third-party tested and certified to comply with NSF-PW potable water and NSF CL-TD chlorine resistance requirements. The service tubing shall be colour coded light blue as manufactured by IPEX under the trade name “Q-Line” or approved equal.

2. Fittings

a. Fittings for composite PE-AL-PE tubing shall be brass water service fittings conforming to AWWA C800.

2.4 COPPER TUBING

1. ASTM B88, Type K, annealed.
2. Fittings: ASME B16, cast copper or ASME B16.22, wrought copper.
3. Joints: Commpression connection or AWS A5.8, BCuP silver braze

2.5 VALVES

A. Valves: Manufacturer’s name and pressure rating shall be marked on valve body.

B. Gate Valves Up to 4 Inches

1. Brass or Bronze body, non-rising stem, inside screw, single wedge or disc, and compression ends with a minimum operating pressure of 150 PSI.

C. Gate Valves 4-inches and larger

1. General

a. Non-potable water service: Provide resilient seat gate valves.

b. Potable water service: Provide resilient seat gate valves.

c. Unless otherwise specified, provide resilient seated valves conforming to AWWA C509 except as modified herein.

d. Provide metallic seated valves, where resilient seated valves are not available in the required sizes, conforming to AWWA C500 except as herein modified.

e. Provide bronze grades A, D or E of AWWA C500 or C509 for wetted bronze parts.

f. Working water pressure: Minimum except where specified or indicated otherwise.

Valve Size	Pressure
4 to 12-in.	200 psi
14-in. and larger	150 psi
24-in. and larger	50 psi

g. Exposed valves: Flanged non-rising stem valves. Face-to-face dimensions to comply with ANSI B16.10, flanges to comply with ANSI B16.1. Provide stainless steel bolts and nuts for all flanged connections.

h. Buried valves: Mechanical joint as shown on Drawings, non-rising stem valves with operating nut in lieu of hand wheel. Provide gate boxes, steel extension stems with centering ring or universal-joint operating rods with 2-inch square operating nuts at upper end with coupling connected to valve stem to bring operating nut to within 6-inches of ground surface.

i. Provide counterclockwise rotation to open valves.

j. Provide handwheels with arrow and word "open" to indicate open direction.

k. Provide conventional packing or double O-rings in non-rising stem valves.

l. Valves capable of being repacked or O-ring replaceable while under pressure.

m. Provide 316 stainless steel bolts and bronze nuts for stuffing box follower.

D. Resilient Seat Gate Valves:

1. Manufacturers:

a. M&H Valve Co., Anniston, AL.

b. American-Darling Valve Div., American Cast Iron Pipe Co., Birmingham, AL.

c. Clow Corp., Chicago, IL.

d. Kennedy Valve, Div. of McWane Inc., Elmira, NY.

e. Or approved equal.

2. Provide resilient seats of materials that are resistant to fluid and fluid temperature in valve.

3. Provide stainless steel bolts and nuts for all flanged connections.

E. Ball Valves up to 3 Inches

1. Quarter-turn type with full pipe size opening through the valve and suitable for a differential working pressure in either direction of not less than 400 PSI.

2. Brass body, self-aligning Type 316 stainless steel ball, blow-out proof Type 316 stainless steel stem, reinforced Teflon seats and seals, plastic-coated Type 304 stainless steel handle, and threaded ends per ANSI B2.1.

2.6 CORPORATION STOPS

A. Manufacturers:

1. Hayes Mfg. Co., Gastonia, NC, Model 5200.

2. Clow Corporation, Chicago, IL.

3. Mueller Co., Decatur, IL.

4. Or approved equal.

B. Materials: ASTM B62 bronze with a lapped, ground key.

C. Inlet thread of steep taper type. Outlet connections to suit type of pipe or tubing connected.

2.7 YARD HYDRANT

A. Materials

1. Head and Handle: Cast Iron.
2. Riser Pipe: Galvanized Steel.
3. Pump Rod: Stainless Steel.
4. Valve Body: Silizon Bronze
5. Hose Adapter: Aluminum.

B. Size

1. Inlet: 1-inch FPT.
2. Outlet: ¾-inch male host thread.

C. Provide freeze proof hydrant.

D. Suitable for working pressures of up to 120 psi.

E. Hose:

1. Provide 50-feet of ¾-inch nylon reinforced hose, rated for 150 psi working pressure, with a brass nozzle.

F. Manufacturers:

1. Simmons, Series 800.
2. Merrill, CNL 1000.
3. Woodford, Model YI.
4. Engineer Approved Equal

2.8 SHOP PAINTING

A. Shop apply to all ferrous surfaces, except stainless steel, a high solids epoxy coating.

B. Surface preparation, mixing and application and safety requirements shall be in accordance with the paint manufacturer's printed instructions.

C. Ferrous surfaces obviously not to be painted shall be given a shop applied coat of grease or rust resistant coating.

2.9 SPARE PARTS (NOT USED)

2.10 STOP VALVES SMALLER THAN 4-INCH

A. Unless otherwise indicated, use bronze globe valves or angle valves for stop valves for sizes smaller than 4-inch. All valves shall be manufactured in the United States and bear a stamp certifying same unless otherwise approved.

2.11 BACKFLOW PREVENTERS

A. Double Check Valve Backflow Preventer

1. Consists of two positive seating, replaceable check modules with captured springs and replaceable rubber seat discs.
2. Make all internal components serviceable through a single bronze or stainless steel access cover with stainless steel bolts.
3. Provide two resilient seated isolation valves and four top mounted resilient seated test cocks.
4. Meet requirements of ASSE 1015 and AWWA C510.

B. RPZ Backflow Preventer

1. Consists of an internal pressure differential relief valve located between two positive seating, replaceable check modules with captured springs and replaceable silicone seat discs.
2. Make all internal components serviceable through a single bronze or stainless-steel access cover with stainless steel bolts.
3. Provide two resilient seated isolation valves, four resilient seated test cocks, and an air gap drain fitting.
4. Meet requirements of ASSE 1013 and AWWA C511.

2.12 WATER METERS

A. Purchase water meters and box from Rockdale County Water Resources. The cost of the meter and box and all impact fees will apply and shall be included on the Bid Form.

2.13 WATER FOR TESTING

A. The CONTRACTOR shall furnish all equipment, piping and required labor to transport water from an existing hydrant or designated tank on-site to the test location for use in testing. The OWNER will provide the water required for testing the Work from a fire hydrant as directed by the OWNER. Contractor shall provide a fire hydrant meter to measure water usage.

2.14 TEST EQUIPMENT

A. The CONTRACTOR shall provide all labor and equipment, including required pumps with regulated bypass meters and gauges, for conducting tests.

2.15 STORM PIPE

A. See Georgia Department of Transportation (GDOT) Specification Section 550-Storm Drain Pipe, Pipe-Arch Culverts, and Side Drain Pipe

3 EXECUTION

3.1 GENERAL

A. Water Utility Distribution Piping and Misc. Pipe

1. Prior to installation, protect stored valves and appurtenances from damage due to exposure to sunlight, heat, dirt, debris, freezing and thawing, and vandalism.
2. Clean debris, dirt, and gravel, from inside of piping before placing valves in place.
3. Erect and support valves in respective positions free from distortion and strain on appurtenances during handling and installation.
4. Set plumb and support valves in conformance with instructions of manufacturer. Shim valves mounted on wall pipes vertically and grout in place. Locate valves in control piping for easy access.
5. Provide sleeve type coupling or flexible type grooved coupling on downstream side of buried valves to assist in valve removal.
6. Provide valves with pinned extension stems for convenience of operation. Provide extension stems for valves installed underground and elsewhere so that operating wrench does not exceed 6 feet in length
7. Supply all necessary safety and protection methods as required by State, local, and OSHA standards and codes.
8. Provide dewatering as required to keep trench and excavation dry during construction.

B. Testing of Pressure Pipelines

1. The entire length of all pressurized pipelines shall be field tested for tightness by a test as described hereinafter.

2. The CONTRACTOR shall furnish all labor and equipment, including required pumps with regulated bypass meters and gauges, for conducting pipeline tests.
3. The CONTRACTOR shall furnish all equipment, piping and required labor to transport water from its source to the test location for use in testing
4. Timing and sequence of testing shall be scheduled by the CONTRACTOR, subject to the approval of the ENGINEER. The CONTRACTOR shall provide the ENGINEER with a minimum of 24-hours' notice prior to the start of any test. All tests must be observed by the ENGINEER
5. The CONTRACTOR shall repair any leaks discovered during the initial filling of the pipeline and during the testing sequence. All known and visible leaks shall be repaired whether or not the leakage rate is within allowable limits

3.2 INSTALLATION – PIPE

A. Maintain separation of water main from sewer piping in accordance with State and local code.
B. Install pipe to indicated elevation to within tolerance of 1-inch.
C. Install ductile iron piping and fittings to AWWA C600.
D. Install grooved and shouldered pipe joints to AWWA C606.
E. Route pipe in straight line.
F. Install pipe to allow for expansion and contraction without stressing pipe or joints.

3.3 INSTALLATION – VALVES

A. Set valves on solid bearing.
B. Provide valve box for each buried stop and valve.
C. Center and plumb valve box over valve and does not bear on valve, stop or pipe. Set valve box flush with finished grade and install concrete collar.

3.4 INSTALLATION – BACKFLOW PREVENTERS

A. Double Check Valve Backflow Preventer
   1. Install backflow preventer in a meter box with a lid. Provide a minimum clearance of 8 inches. Place crushed stone at the bottom of the box.
   2. Install heat tracing on the backflow preventer.
   3. Locate the backflow preventer at the water meter
B. RPZ Backflow Preventer
   1. Install backflow preventer above ground over a concrete pad with a Hot Box enclosure.
C. Obtain the services of a County approved backflow preventer testing firm to verify the operation of the backflow preventer. Submit the certificate of testing to the Owner for final acceptance.

3.5 TEST PROCEDURES FOR PRESSURE PIPELINES

A. General:
   1. All pipelines shall be pressure tested in accordance with the specifications following for each type of service.
   2. All meters, fixtures, devices or applications which are connected to the pipeline system and which might be damaged if subjected to the specified test pressure shall be disconnected and the ends of the branch lines plugged or capped during the test procedures. Items that are damaged during the testing procedure shall be repaired or replaced by the CONTRACTOR at no expense to the OWNER.

3. Where any section of a pipeline is provided with concrete reaction blocking, the pressure test shall not be made until at least five days have elapsed after installation of the blocking.
4. Clean and test lines before requesting final acceptance. Where any obstruction is met, clean the lines by means of rods, swabs, or other instruments. When requested by the ENGINEER, flush out lines and manholes before final inspection.

B. Pressure Piping:

1. All sections of pipeline subject to internal pressure shall be pressure tested in accordance with AWWA C600. A section of line will be considered ready for testing after completion of all thrust restraint and backfilling, subject to curing of concrete blocking as specified herein.
2. Test Preparation:
   a. Flush pipeline section thoroughly at flow velocities greater than 2.5 feet per second, to remove debris from pipe and valve seats. Partially operate valves and hydrants to clean out seats. Provide correctly sized temporary outlets in number adequate to achieve flushing velocities.
   b. Provide temporary blocking, bulkheads, flanges and plugs to assure all new pipe, valves and appurtenances will be pressure tested.
   c. Applying test pressure, air shall be completely expelled from the pipeline and all appurtenances. Unless permanent air vents are in place, insert temporary corporation stops at highpoints to expel air as line is filled with water.
   d. Fill pipeline slowly with water. Provide a suitable pump with an accurate water meter to pump the line to the specified pressure. Differential pressure at valves and hydrants shall equal the maximum possible but shall not exceed manufacturer's pressure rating. Provide temporary back pressure to meet the differential pressure restrictions.
   e. Valves and hydrants shall not be operated in either the opening or closing direction at differential pressures above their rated pressure.
3. The test pressure shall be applied to the lowest point in the test segment and shall be maintained for a minimum of two hours.
4. The test pressure shall not vary by more than 5 psi for the test duration. Should the pressure drop more than 5 psi at any time during the test period, the pressure shall be restored to the specified test pressure. Provide an accurate pressure gauge with graduation not less than 5 psi.
5. Leakage: Leakage shall be defined as the quantity of water that must be pumped into the test section equal to the sum of the water, to maintain pressure within 5 psi of the specified test pressure for the test duration plus water required to return line to test pressure at the end of the test. Leakage shall be the total cumulative amount measured on a water meter.
6. Test Results: No test section of steel or ductile-iron pipe shall be accepted if the leakage exceeds the limits determined under Section 4 of AWWA C600. The leakage test shall be repeated until the test section is accepted. All visible leaks shall be repaired regardless of leakage test results. Allowable leakage in PVC pipe, if used on the project, shall be 11.65 gallons per inch of nominal diameter per mile over a 24-hour period.
7. Completion: After a pipeline section has been accepted, relieve test pressure. Record type, size and location of all outlets on record drawings.

C. Miscellaneous Pressure Piping:

1. Upon completion of each piping system or sub-system, blow the lines free of dirt and debris and test in the presence of the ENGINEER. Wherever possible, test before the trench is backfilled. Drain piping shall be tested prior to encasement in concrete. The

minimum test duration shall be one hour. The pipeline shall fail the test if a measurable pressure drop is observed.

3.6 REPAIRS - PIPELINES

A. If the leakage exceeds the specified allowable limits, the point or points of leakage shall be sought out and remedied by the CONTRACTOR at no additional cost to the OWNER. Repair methods must be approved by the ENGINEER.

3.7 CLEANUP

A. After completing each section of the pipeline, the CONTRACTOR shall remove all debris, construction materials, and equipment from the site of the work, grade and smooth over the surface on both sides of the line and leave the entire right-of-way in a clean, neat, and serviceable condition.

3.8 FINAL ACCEPTANCE

A. No pipeline installation or hydraulic structure shall be accepted until compliance with allowable leakage limits.

B. The CONTRACTOR will certify that all required tests have been successfully completed before the work is accepted.

** END OF SECTION **

SECTION 26 05 02 - BASIC ELECTRICAL REQUIREMENTS

PART 1 - GENERAL

1.1 SUMMARY

A. Requirements specified within this section apply to Division 26, Electrical. Work specified herein shall be performed as if specified in the individual sections.

B. Summary of work:
1. Testing of all existing cable to verify acceptable condition for cable reuse.
2. Conduit, wire, field connections and installation for all motors, motor controllers, control devices, control panels, and “packaged” equipment furnished under other Divisions of these Specifications.
3. Installation, mounting and field wiring for all field-mounted devices and instruments, furnished under other Divisions of these Specifications, which require on-site electrical or electronic wiring supply / terminations. All conduit, wire, and interconnections between devices, primary elements, transmitters, indicators, sensors, switches, alarms, control panels, etc. Installation of all cables and equipment furnished by instrumentation and electronic system suppliers and process control system suppliers.
4. Installation of all control panels, controllers, etc. furnished under other Divisions of these Specifications.
5. Complete, functional, fully installed, interconnected and tested systems for power, control, lighting, grounding, telephone, data, etc. as indicated in other Sections of Division 26 – Electrical, and as shown on the Contract Drawings.
6. Unless specified otherwise, Contractor shall review the Shop Drawings of all electrically operated equipment and equipment with electrical connections furnished under all divisions of these specifications. Contractor shall wire and interconnect all materials, devices, components, systems and packages requiring “field wiring”. Where applicable, Contractor shall make electrical interconnections per manufacturer s requirements. This includes, but is not limited to, devices that are parts of “packages” but which are shipped separately and require field connection. Also, Contractor shall identify terminals and prepare drawings or wiring tables to extent necessary to enable interconnections.
7. Demolition, where required.

1.2 ACTION SUBMITTALS

A. The Contractor shall submit shop drawings and product data to the Engineer in accordance with the requirements of Section 01 33 23, Shop Drawings, Product Data, and Samples.

B. Provide Data For:
1. Electrical service components.
2. Telephone service components.
3. Nameplates, signs, and labels.

C. Provide preliminary submittal for sequence of construction 14 days in advance of coordination meeting. Preliminary submittal shall include items listed in special project requirements.

1.3 REFERENCES

A. The following is a list of standards which may be referenced in this section:
1. National Electrical Contractors Association (NECA): National Electrical Installation Standards.
2. National Electrical Manufacturers Association (NEMA):
   a. 250, Enclosures for Electrical Equipment (1,000 Volts Maximum).
   b. Z535.4, Product Safety Signs and Labels.
3. National Fire Protection Association (NFPA): 70, National Electrical Code (NEC).
4. Underwriters Laboratories, Inc. (UL).

1.4 QUALITY ASSURANCE

A. Provide the Work in accordance with NFPA 70. Where required by Authority Having Jurisdiction (AHJ), material and equipment shall be labeled or listed by a nationally recognized testing laboratory or other organization acceptable to the AHJ, in order to provide a basis for approval under the NEC.

B. Materials and equipment manufactured within the scope of standards published by Underwriters Laboratories Inc. shall conform to those standards and shall have an applied UL listing mark or label.

C. Provide materials and equipment acceptable to AHJ for Class, Division, and Group of hazardous area indicated.

1.5 WARRANTIES AND BONDS

A. The Contractor shall provide a warranty against defective or deficient materials and workmanship in accordance with the requirements of Section 01 78 36, Warranties.

B. The equipment manufacturer shall provide a warranty against defective or deficient equipment, workmanship and materials under normal use, operation and service. Unless otherwise specified, the warranty shall be for one (1) year from the date of Engineer's acceptance of the work. The warranty shall be in printed form and apply to all similar units."

PART 2 - PRODUCTS

2.1 GENERAL

A. Where two or more units of the same class of material or equipment are required, provide products of a single manufacturer. Component parts of materials or equipment need not be products of the same manufacturer.

B. Material and equipment installed in heated and ventilated areas shall be capable of continuous operation at their specified ratings within an ambient temperature range of 40 degrees F to 104 degrees F.

C. Materials and equipment installed outdoors shall be capable of continuous operation at their specified rating within the site ambient temperature range.

2.2 EQUIPMENT FINISH

A. Manufacturer's standard finish color, except where specific color is indicated. If manufacturer has no standard color, finish equipment in accordance with, light gray color finish as approved by Owner.

2.3 NAMEPLATES

A. Material: Laminated plastic.

B. Attachment Screws: Stainless steel.

C. Color: White, engraved to a black core.

D. Letter Height:
1. Pushbuttons/Selector Switches: 1/8 inch.
2. Other electrical equipment: 1/4 inch.

2.4 SIGNS AND LABELS

A. Sign size, lettering, and color shall be in accordance with NEMA Z535.4.

PART 3 - EXECUTION

3.1 GENERAL

A. Electrical Drawings show general locations of equipment, devices, and raceway, unless specifically dimensioned. Contractor shall be responsible for actual location of equipment and devices and for proper routing and support of raceways, subject to approval of Engineer.

B. Check approximate locations of light fixtures, switches, electrical outlets, equipment, and other electrical system components shown on Drawings for conflicts with openings, structural members, and components of other systems and equipment having fixed locations. In the event of conflicts, notify Engineer in writing.

C. Install work in accordance with NECA Standard of Installation, unless otherwise specified.

D. Keep openings in boxes and equipment closed during construction.

E. Lay out work carefully in advance. Do not cut or notch any structural member or building surface without specific approval of Engineer. Carefully perform cutting, channeling, chasing, or drilling of floors, walls, partitions, ceilings, paving, or other surfaces required for the installation, support, or anchorage of conduit, raceways, or other electrical materials and equipment. Following such work, restore surfaces to original condition.

3.2 ANCHORING AND MOUNTING

A. Equipment anchoring and mounting shall be in accordance with manufacturer's requirements.

3.3 COMBINING CIRCUITS INTO COMMON RACEWAY

A. Homerun circuits shown on Drawings indicate functional wiring requirements for power and control circuits. Circuits may be combined into common raceways in accordance with the following requirements:

1. Analog control circuits from devices in same general area to same destination.
   a. No power or AC discrete control circuits shall be combined in same conduit with analog circuits.
   b. No Class 2 or Class 3 circuits including, but not limited to, HVAC control circuits, fire alarm circuits, paging system circuits shall be combined with power or Class 1 circuits.
   c. Analog circuits shall be continuous from source to destination. Do not add TJB, splice, or combine into a multi-pair cable without authorization of Engineer.
   d. Raceways: shall be sized per General Circuit and Raceway Schedule and do not exceed 40 percent fill.
   e. Changes shall be documented on Record Drawings.
2. Discrete control circuits from devices in the same general area to the same destination.
   a. No power or analog control circuits shall be combined in same conduit with discrete circuits.
   b. No Class 2 or Class 3 circuits including, but not limited to, HVAC control circuits, fire alarm circuits, and paging system circuits shall be combined with power or Class 1 circuits.
   c. Raceways shall be sized per the General Circuit and Raceway Schedule and do not exceed 40 percent fill.
   d. Changes shall be documented on Record Drawings.
3. Power circuits from loads in same general area to same source location (such as: panelboard, switchboard, low voltage motor control center).
   a. Lighting Circuits: Combine no more than three circuits to a single raceway. Contractor shall be responsible for increasing conduit and conductor size if derating is required by NEC.
   b. Receptacle Circuits, 120-Volt Only: Combine no more than three circuits to a single raceway. Provide a separate neutral conductor for each circuit. Contractor shall be responsible for increasing conduit and conductor size if derating is required by NEC.
   c. All Other Power Circuits: Do not combine power circuits without authorization of Engineer.

3.4 NAMEPLATES, SIGNS, AND LABELS

A. Equipment Nameplates:

1. Provide a nameplate to label electrical equipment including switchgear, switchboards, motor control centers, panelboards, motor starters, transformers, terminal junction boxes, disconnect switches, switches and control stations.
2. Switchgear, motor control center, transformer, and terminal junction box nameplates shall include equipment designation.
3. Disconnect switch, starter, and control station nameplates shall include name and number of equipment powered or controlled by that device.
4. Switchboard and panelboard nameplates shall include equipment designation, service voltage, and phases.

3.5 LOAD BALANCE

A. Drawings and Specifications indicate circuiting to electrical loads and distribution equipment.

B. Balance electrical load between phases as nearly as possible on switchboards, panelboards, motor control centers, and other equipment where balancing is required.

C. When loads must be reconnected to different circuits to balance phase loads, maintain accurate record of changes made, and provide circuit directory that lists final circuit arrangement.

3.6 CLEANING AND TOUCHUP PAINTING

A. Cleaning: Throughout the Work, clean interior and exterior of devices and equipment by removing debris and vacuuming. Includes all electrical gear and cabinets.

B. Touchup Paint:
1. Touchup scratches, scrapes and chips on exterior and interior surfaces of devices and equipment with finish matching type, color, and consistency and type of surface of original finish.
2. If extensive damage is done to equipment paint surfaces, refinish entire equipment in a manner that provides a finish equal to or better than factory finish, that meets requirements of Specification, and is acceptable to Engineer.

3.7 PROTECTION FOLLOWING INSTALLATION

A. Protect materials and equipment from corrosion, physical damage, and effects of moisture on insulation and contact surfaces.

B. When equipment intended for indoor installation is installed at Contractor's convenience in areas where subject to dampness, moisture, dirt or other adverse atmosphere until completion of construction, ensure adequate protection from these atmospheres is provided and acceptable to Engineer.

END OF SECTION 260502

SECTION 260505 - CONDUCTORS

PART 1 - GENERAL

1.1 SUMMARY

A. This section includes all cables and conductors to be used for the connection of equipment covered under section 26.

1.2 ACTION SUBMITTALS

A. Wire and cable descriptive product information.

B. Wire and cable accessories descriptive product information.

C. Cable Pulling Calculations:
1. Calculations shall be submitted and reviewed before cable installation.
2. Provide cable pulling calculations for the following cable installations: Medium voltage cable runs that cannot be hand pulled.

1.3 INFORMATIONAL SUBMITTALS

A. Factory Test Report for conductors 600 volts and below.

1.4 REFERENCES

A. The following is a list of standards which may be referenced in this section:
1. ASTM International (ASTM):
   a. A167, Standard Specification for Stainless and Heat-Resisting Chromium-Nickel Steel Plate, Sheet, and Strip.
   b. B3, Standard Specification for Soft or Annealed Copper Wire.
   c. B8, Standard Specification for Concentric-Lay-Stranded Copper Conductors, Hard, Medium-Hard, or Soft.
   d. B496, Standard Specification for Compact Round Concentric Lay-Stranded Copper Conductors.
2. Electronic Industries Alliance (EIA), Telecommunications Industry Association (TIA): TIA-568-B, Commercial Building Telecommunications Cabling Standard.
3. Insulated Cable Engineer's Association, Inc. (ICEA):
   a. S-58-679, Standard for Control Cable Conductor Identification.
   b. S-73-532, Standard for Control Cables.
   c. T-29-520, Conducting Vertical Cable Tray Flame Tests with Theoretical Heat Input of 210,000 Btu/hour.
4. Institute of Electrical and Electronics Engineers, Inc. (IEEE):
   a. 386, Separable Insulated Connector Systems for Power Distribution Systems Above 600V.
5. National Electrical Manufacturers' Association (NEMA):
   a. CC 1, Electric Power Connectors for Substations.
   b. WC 57, Standard for Control, Thermocouple Extension, and Instrumentation Cables - ICEA S-73-532.

c. WC 70, Standard for Nonshielded Power Cables Rated 2,000 Volts or Less for the Distribution of Electrical Energy.
d. WC 71, Standard for Nonshielded Cables Rated 2,001-5,000 Volts for Use in the Distribution of Electric Energy.
e. WC 74, 5-46 kV Shielded Power Cable for Use in the Transmission and Distribution of Electric Energy.

6. National Fire Protection Association (NFPA):
   a. 70, National Electrical Code (NEC).
   b. 262, Method of Test for Flame Travel and Smoke of Wires and Cables for Use in Air-Handling Spaces.
7. Underwriters Laboratories Inc. (UL):
   a. 13, Standard for Safety Power-Limited Circuit Cables.
   b. 44, Standard for Safety Thermoset-Insulated Wires and Cables.
   c. 62, Standard for Safety Flexible Cord and Cables.
   d. 486A-486B, Wire Connectors.
   e. 486C, Standard for Splicing Wire Connections.
   f. 510, Standard for Safety Polyvinyl Chloride, Polyethylene, and Rubber Insulating Tape.
   g. 854, Standard for Safety Service-Entrance Cables.
   h. 1072, Standard for Safety Medium-Voltage Power Cables.
   i. 1277, Standard for Safety Electrical Power and Control Tray Cables with Optional Optical-Fiber Members.
   j. 1569, Metal Clad Cables.
   k. 1581, Standard for Safety Reference Standard for Electrical Wires, Cables, and Flexible Cords.

1.5 QUALITY ASSURANCE

A. Authority Having Jurisdiction (AHJ):
1. Provide the Work in accordance with NFPA 70. Where required by the AHJ, material and equipment shall be labeled or listed by a nationally recognized testing laboratory or other organization acceptable to the AHJ in order to provide a basis for approval under NEC.
2. Materials and equipment manufactured within the scope of standards published by Underwriters Laboratories Inc. shall conform to those standards and shall have an applied UL listing mark.

PART 2 - PRODUCTS

2.1 CONDUCTORS 600V AND BELOW

A. Conform to applicable requirements of NEMA WC 70.

B. Conductor Type:
1. 120-Volt and 277-Volt Lighting, 10 AWG and Smaller: Solid copper.
2. 120-Volt Receptacle Circuits, 10 AWG and Smaller: Solid copper.
3. All Other Circuits: Stranded copper

C. Insulation: Type THHN/THWN-2, except for sizes No. 6 and larger, with XHHW-2 insulation.

D. Flexible Cords and Cables:
1. Type SOW-A/50 with ethylene propylene rubber insulation in accordance with UL 62.

2. Conform to physical and minimum thickness requirements of NEMA WC 70.

2.2 600V RATED CABLE

A. General:
1. Type TC, meeting requirements of UL 1277, including Vertical Tray Flame Test at 70,000 Btu per hour, and NFPA 70, Article 340, or UL 13 meeting requirements of NFPA 70, Article 725.
2. Permanently and legibly marked with manufacturer's name, maximum working voltage for which cable was tested, type of cable, and UL listing mark.
3. Suitable for installation in open air, in cable trays, or conduit.
4. Minimum Temperature Rating: 90 degrees C dry locations, 75 degrees C wet locations.
5. Overall Outer Jacket: PVC, flame-retardant, sunlight- and oil-resistant

B. Type 1, Multiconductor Control Cable:
1. Conductors:
   a. 14 AWG, seven-strand copper.
   b. Insulation: 15-mil PVC with 4-mil nylon.
   c. UL 1581 listed as Type THHN/THWN rated VW-1.
   d. Conductor group bound with spiral wrap of barrier tape.
   e. Color Code: In accordance with ICEA S-58-679, Method 1, Table 2.
2. Cable: Passes the ICEA T-29-520 210,000 Btu per hour Vertical Tray Flame Test.
3. Cable Sizes:

No. Of Conductors	Max Outside Diameter (in)	Jacket Thickness (Mils)
3	0.41	45
5	0.48	45
7	0.52	45
1	0.72	60
9	0.83	60
25	1.00	60
37	1.15	80

4. Manufacturers:
   a. Okonite Co.
   b. Southwire

C. Type 2, Multiconductor Power Cable:
1. General:
   a. Meet or exceed UL 1581 for cable tray use.
   b. Meet or exceed UL 1277 for direct burial and sunlight-resistance.
   c. Overall jacket: PVC.
2. Conductors:
   a. Class B stranded, coated copper.
   b. Insulation: Chemically cross-linked ethylene-propylene or crosslinked polyethylene.
   c. UL rated VW-1 or listed Type XHHW-2.
   d. Color Code:
      1) Conductors, size 8 AWG and smaller, colored conductors, ICEA S-58-679, Method 1, Table 1.
      2) Conductors, size 6 AWG and larger, ICEA S-73-532, Method 4.
3. Cable shall pass ICEA T-29-520, 210,000 Btu per hour Vertical Tray Flame Test.
4. Cable Sizes:

Conductor Size	Minimum Ground Wire Size	No. Of Current Carrying Conductors	Max. Outside Diameter (in)	Nominal Jacket Thickness (Mils)
12	12	2	0.42	45
		3	0.45	45
		4	0.49	45
10	10	2	0.54	60
		3	0.58	60
		4	0.63	60
8	10	3	0.66	60
		4	0.75	60
6	8	3	0.74	60
		4	0.88	60
4	6	3	0.88	60
		4	1.04	80
2	6	3	1.01	80
		4	1.16	80
1	6	3	1.10	80
		4	1.25	80
1/0	6	3	1.22	80
		4	1.35	80
2/0	4	3	1.32	80
		4	1.53	80
3/0	4	3	1.40	80
		4	1.60	80
4/0	4	3	1.56	80
		4	1.78	110

5. Manufacturers:
   a. Okonite Co.
   b. Southwire

D. Type 3, 16 AWG, Twisted, Shielded Pair, Instrumentation Cable: Single pair, designed for noise rejection for process control, computer, or data log applications meeting NEMA WC 57 requirements.
1. Outer Jacket: 45-mil nominal thickness.
2. Individual Pair Shield: 1.35-mil, double-faced aluminum/synthetic polymer overlapped to provide 100 percent coverage.
3. Dimension: 0.31-inch nominal OD.
4. Conductors:
   a. Bare soft annealed copper, Class B, seven-strand concentric, meeting requirements of ASTM B8.
   b. 20 AWG, seven-strand tinned copper drain wire.
   c. Insulation: 15-mil nominal PVC.

d. Jacket: 4-mil nominal nylon.
e. Color Code: Pair conductors, black and red.

5. Manufacturers:
a. Okonite Co.
b. Alpha Wire Corp.
c. Belden.

E. Type 4, 16 AWG, Twisted, Shielded Triad Instrumentation Cable: Single triad, designed for noise rejection for process control, computer, or data log applications meeting NEMA WC 57 requirements.

1. Outer Jacket: 45-mil nominal.
2. Individual Pair Shield: 1.35-mil, double-faced aluminum/synthetic polymer, overlapped to provide 100 percent coverage.
3. Dimension: 0.32-inch nominal OD.
4. Conductors:
a. Bare soft annealed copper, Class B, seven-strand concentric, meeting requirements of ASTM B8.
b. 20 AWG, seven-strand, tinned copper drain wire.
c. Insulation: 15-mil nominal PVC.
d. Jacket: 4-mil nylon.
e. Color Code: Triad conductors black, red, and blue.
5. Manufacturers:
a. Okonite Co.
b. Alpha Wire Corp.
c. Belden.

F. Type 5, 18 AWG, Multi-Twisted, Shielded Pairs with a Common, Overall Shield Instrumentation Cable: Designed for use as instrumentation, process control, and computer cable, meeting NEMA WC 57 requirements.

1. Conductors:
a. Bare soft annealed copper, Class B, seven-strand concentric, in accordance with ASTM B8.
b. Tinned copper drain wires.
c. Pair drain wire size AWG 20, group drain wire size AWG 18.
d. Insulation: 15-mil PVC.
e. Jacket: 4-mil nylon.
f. Color Code: Pair conductors, black and red with red conductor numerically printed for group identification.
g. Individual Pair Shield: 1.35-mil, double-faced aluminum/synthetic polymer.
2. Cable Shield: 2.35-mil, double-faced aluminum/synthetic polymer, overlapped for 100 percent coverage.
3. Cable Sizes:

Number of Pairs	Max. Outside Diameter (in)	Nominal Jacket Thickness (Mils)
4	0.50	45
8	0.68	60
12	0.82	60
16	0.95	80
24	1.16	80
36	1.33	80
50	1.56	80

4. Manufacturers
a. Okonite Co.

b. Alpha Wire Co.
c. Belden

G. Type 8, Multi-Conductor Adjustable Frequency Drive (AFD and VFD) Power Cable:
1. Conductors:
a. Class B, stranded coated copper.
b. Insulation: 600-volt cross-linked polyethylene, UL Type XHHW-2.
c. Grounding Conductors: Insulated stranded copper.
2. Sheath:
a. UL 1277 Type TC, 90 degrees C.
b. Continuous shield, A1/polyester foil, drain wires, overall copper braid.
3. Outer Jacket: Polyvinyl chloride (PVC) per UL 1569.
4. Cable Sizes:

Conductor Size (AWG)	Minimum Ground Wire size (AWG)	No. Of Insulated Conductors	Max Outside Diameter (in)	Jacket Thickness (Mils)
12	12	4	0.610	50
10	10	4	0.670	50
8	8	4	0.910	50
6	6	4	1.010	50
4	4	4	1.150	50
2	2	4	1.310	50

5. Manufacturers and Products:

a. Belden, Series 29500.
b. Alpha Wire, Series V.
c. LAPP USA, OLFLEX VFD Slim.

2.3 SPECIAL CABLES

A. Type 30, Unshielded Twisted Pair (UTP) Telephone and Data Cable, 300V:
1. Category 6 UTP, UL listed, and third party verified to comply with TIA/EIA 568-B.2-1 Category 6 requirements.
2. Suitable for high speed network applications including gigabit ethernet and video. Cable shall be interoperable with other standards compliant products and shall be backward compatible with Category 5 and Category 5e.
3. Provide four each individually twisted pair, 23 AWG conductors, with FEP insulation and blue PVC jacket.
4. NFPA 70 Plenum (CMP) rated, comply with flammability plenum requirements of NFPA 70 and NFPA 262.
5. Cable shall withstand a bend radius of 1-inch minimum at a temperature of minus 20 degrees C maximum without jacket or insulation cracking.
6. Manufacturer and Product: Belden; 7852A.

B. Type 31, Data Highway Cable, Allen-Bradley “Blue Hose.”
1. Meet or exceed electrical characteristics of Allen-Bradley Catalog No. 1770-CD.
2. Approved by Allen-Bradley for use with A-B programmable logic controller systems.
3. Outer Jacket: Blue PVC.
4. Shield: 1.35-mil, double-faced aluminum/synthetic polymer, overlapped to provide 100 percent coverage.
5. Drain: 55 percent tinned copper braid and drain wire.
6. Dimension: 0.243-inch nominal OD.
7. Conductors:
a. One pair #20 AWG, seven-strand tinned copper.

b. Insulation: Polyethylene.
c. Color Code: Blue and clear.
8. Manufacturers:
a. Allen-Bradley.
b. Belden.

C. Type 32, DeviceNet Round Cable, 600V, Class 1, Two Twisted, Shielded Pairs with a Common Overall Shield:
1. Outer Jacket: PVC.
2. Overall Shield: Tinned copper braid, 18 AWG tinned copper drain wire.
3. Individual Pair Shield: Aluminum foil-polyester tape.
4. Dimension: 0.460-inch nominal OD.
5. Conductors:
a. 15 AWG stranded tinned copper.
b. Insulation: FEP.
6. Manufacturer and Product: Belden; 7897A.

D. Type 33, DeviceNet Flat Cable, 600V, Class 1, Four Conductor Unshielded Network Trunk Cable:
1. Outer Jacket: Thermoplastic Elastomer (TPE).
2. Conductors: Four conductor, unshielded, flat configuration.
3. Manufacturer and Product: Allen-Bradley; 1485C-P1E.

2.4 GROUNDING CONDUCTORS

A. Equipment: Stranded copper with green, Type USE/RHH/RHW-XLPE or THHN/THWN, insulation.

B. Direct Buried: Bare stranded copper.

2.5 ACCESSORIES FOR CONDUCTORS 600 VOLTS AND BELOW

A. Tape:
1. General Purpose, Flame Retardant: 7-mil, vinyl plastic, Scotch Brand 33+, rated for 90 degrees C minimum, meeting requirements of UL 510.
2. Flame Retardant, Cold and Weather Resistant: 8.5-mil, vinyl plastic, Scotch Brand 88.
3. Arc and Fireproofing:
a. 30-mil, elastomer.
b. Manufacturers and Products:
1) 3M; Scotch Brand 77, with Scotch Brand 69 glass cloth tapebinder.
2) Plymouth; 53 Plyarc, with 77 Plyglas glass cloth tapebinder.

B. Identification Devices:
1. Sleeve:
a. Permanent, PVC, yellow or white, with legible machine-printed black markings.
b. Manufacturers and Products:
1) Raychem; Type D-SCE or ZH-SCE.
2) Brady, Type 3PS.
2. Heat Bond Marker:
a. Transparent thermoplastic heat bonding film with acrylic pressure sensitive adhesive.
b. Self-laminating protective shield over text.
c. Machine printed black text.

d. Manufacturer and Product: 3M Co.; Type SCS-HB.
3. Marker Plate: Nylon, with legible designations permanently hot stamped on plate.
4. Tie-On Cable Marker Tags:
a. Chemical-resistant white tag.
b. Size: 1/2 inch by 2 inches.
c. Manufacturer and Product: Raychem; Type CM-SCE.
5. Grounding Conductor: Permanent green heat-shrink sleeve, 2-inch minimum.

C. Connectors and Terminations:
1. Nylon, Self-Insulated Crimp Connectors:
a. Manufacturers and Products:
1) Thomas & Betts; Sta-Kon.
2) Burndy; Insulug.
3) ILSCO: ILSCONS.
2. Nylon, Self-Insulated, Crimp Locking-Fork, Torque-Type Terminator:
a. Suitable for use with 75 degrees C wire at full NFPA 70, 75 degrees C ampacity.
b. Seamless.
c. Manufacturers and Products:
1) Thomas & Betts; Sta-Kon.
2) Burndy; Insulink.
3) ILSCO; ILSCONS.
3. Self-Insulated, Freespring Wire Connector (Wire Nuts):
a. UL 486C.
b. Plated steel, square wire springs.
c. Manufacturers and Products:
1) Thomas & Betts.
2) Ideal; Twister.
4. Self-Insulated, Set Screw Wire Connector:
a. Two piece compression type with set screw in brass barrel.
b. Insulated by insulator cap screwed over brass barrel.
c. Manufacturers:
1) 3M Co.
2) Thomas & Betts.
3) Marrette.

D. Cable Lugs:
1. In accordance with NEMA CC 1.
2. Rated 600 volts of same material as conductor metal.
3. Uninsulated Crimp Connectors and Terminators:
a. Suitable for use with 75 degrees C wire at full NFPA 70, 75 degrees C ampacity.
b. Manufacturers and Products:
1) Thomas & Betts; Color-Keyed.
2) Burndy, Hydent.
3) ILSCO: PDB.
4. Uninsulated, Bolted, Two-Way Connectors and Terminators:
a. Manufacturers and Products:
1) Thomas & Betts; Locktite.
2) Burndy; Quiklug.
3) ILSCO: PBTD.

E. Cable Ties:
1. Nylon, adjustable, self-locking, and reusable.
2. Manufacturer and Product: Thomas & Betts; TY-RAP.

F. Heat Shrinkable Insulation:
1. Thermally stabilized cross-linked polyolefin.

2. Single wall for insulation and strain relief.
3. Dual Wall, adhesive sealant lined, for sealing and corrosion resistance.
4. Manufacturers and Products:
   a. Thomas & Betts; SHRINK-KON.
   b. Raychem; RNF-100 and ES-2000.

G. Data Cable Accessories: Terminators, connectors, and junctions necessary for a complete DeviceNet system.

2.6 PULLING COMPOUND

A. Nontoxic, noncorrosive, noncombustible, nonflammable, water-based lubricant; UL listed.

B. Suitable for rubber, neoprene, PVC, polyethylene, hypalon, CPE, and lead-covered wire and cable.

C. Approved for intended use by cable manufacturer.

D. Suitable for zinc-coated steel, aluminum, PVC, bituminized fiber, and fiberglass raceways.

E. Manufacturers:
1. Ideal Co.
2. Polywater, Inc.
3. Cable Grip Co.

2.7 WARNING TAPE

A. As specified in Section 26 05 33, Raceways and Boxes.

2.8 SOURCE QUALITY CONTROL

A. Conductors 600 Volts and Below: Test in accordance with UL 44 and UL 854.

PART 3 - EXECUTION

3.1 GENERAL

A. Conductor installation shall be in accordance with manufacturer’s recommendations.

B. Conductor and cable sizing shown is based on copper conductors, unless noted otherwise.

C. Do not exceed cable manufacturer’s recommendations for maximum pulling tensions and minimum bending radii.

D. Terminate all conductors and cables, unless otherwise indicated.

E. Tighten screws and terminal bolts in accordance with UL 486A-486B for copper conductors.

F. Cable Lugs: Provide with correct number of holes, bolt size, and center-to-center spacing as required by equipment terminals.

G. Bundling: Where single conductors and cables in manholes, handholes, vaults, cable trays, and other indicated locations are not wrapped together by some other means, bundle conductors from each conduit throughout their exposed length with cable ties placed at intervals not exceeding 18 inches on center.

H. Ream, remove burrs, and clear interior of installed conduit before pulling wires or cables.

I. Concrete-Encased Raceway Installation: Prior to installation of conductors, pull through each raceway a mandrel approximately 1/4 inch smaller than raceway inside diameter.

3.2 POWER CONDUCTOR COLOR CODING

A. Conductors 600 Volts and Below:
1. 6 AWG and Larger: Apply general purpose, flame retardant tape at each end, and at accessible locations wrapped at least six full overlapping turns, covering an area 1-1/2 inches to 2 inches wide.
2. 8 AWG and Smaller: Provide colored conductors.
3. Colors:

System	Conductor	Color
All Systems	Equipment Grounding	Green
240/120v 1Ph, 3W	Grounded Neutral One Hot Leg Other Hot Leg	White Black Red
208/120v 3Ph, 4W	Grounded Neutral Phase A Phase B Phase C	White Black Red Blue
240/120v 3Ph, 4W Delta, Center Tap Ground on 1Ph	Grounded Neutral Phase A High (Wild) Leg Phase C	White Black Orange Blue
240/120v 1Ph, 3W	Grounded Neutral One Hot Leg Other Hot Leg	White Black Red
480/277v 3Ph, 4W	Grounded Neutral Phase A Phase B Phase C	White Brown Orange Yellow
NOTE: Phase A, B, C implies direction of positive Phase Rotation		

4. Tracer: Outer covering of white with an identifiable colored strip, other than green, in accordance with NFPA 70.

3.3 CIRCUIT IDENTIFICATION

A. Identify power, instrumentation, and control conductor circuits at each termination, and in accessible locations such as manholes, handholes, panels, switchboards, motor control centers, pull boxes, and terminal boxes.

B. Circuits Not Appearing in Circuit Schedules:

1. Assign circuit name based on device or equipment at load end of circuit.
2. Where this would result in same name being assigned to more than one circuit, add number or letter to each otherwise identical circuit name to make it unique.

C. Method:
1. Conductors 3 AWG and Smaller: Identify with sleeves or heat bond markers.
2. Cables and Conductors 2 AWG and Larger:
   a. Identify with marker plates or tie-on cable marker tags.
   b. Attach with nylon tie cord.
3. Taped-on markers or tags relying on adhesives not permitted.

3.4 WIRING IDENTIFICATION:

A. In addition to color coding, all wiring shall be identified at each point of termination. This includes but is not limited to identification at the source, load, and in any intermediate junction boxes where a termination is made. The Contractor shall meet with the Owner and Engineer to come to an agreement regarding a wire identification system prior to installation of any wiring. Wire numbers shall not be duplicated.

B. Wire identification shall be by means of a heat shrinkable sleeve. Sleeves shall have a white background with black text. Wire sizes #14 AWG through #10 AWG shall have a minimum text size of 7 points. Wire sizes #8 AWG and larger shall have a minimum text size of 10 points. Sleeves shall be of appropriate length to fit the required text. The use of handwritten text for wire identification shall not be permitted.

C. Sleeves shall be suitable for the size of wire on which they are installed. When installation is complete, sleeves shall be tightly affixed to the wire and shall not move. Sleeves shall be heat shrunk onto wiring with a heat gun approved for the application. Sleeves shall not be heated by any means which employs the use of an open flame. The Contractor shall take special care to ensure that the wiring insulation is not damaged during the heating process.

D. Sleeves shall be installed prior to the completion of the wiring terminations and shall be oriented so that they can be easily read.

E. Sleeves shall be white polyolefin as manufactured by Brady, Seton equivalent, Panduit equivalent, or equal.

F. Where sleeves are not available in the size required for the wire, the Contractor shall use an adhesive label with a white background and black text. Text size shall be in accordance with the requirements listed above.

G. Adhesive labels, for the case when sleeves are not suitable for the wire size, shall be white permanent vinyl as manufactured by Brady, Seton equivalent, Panduit equivalent, or equal.

H. Wire identification in manholes, handholes, pull boxes, and other accessible components in the raceway system where the wiring is continuous shall be accomplished by means of a tag installed around the bundled group of conductors. Identification shall utilize a FROM-TO system. Each group of conductors shall consist of all of the individual conductors in a single conduit or duct. The tag shall have text that identifies the bundle in accordance with the ‘FROM’ and ‘TO’ column for that particular conduit number in the conduit and wire schedule. Minimum text size shall be 10 point. The tag shall be affixed to the wire bundle by the use of nylon wire ties, and shall be made of polyethylene as manufactured by Brady, Seton equivalent, Panduit equivalent, or equal.

3.5 CONDUCTORS 600 VOLTS AND BELOW

A. Install 10 AWG or 12 AWG conductors for branch circuit power wiring in lighting and receptacle circuits.

B. Do not splice incoming service conductors and branch power distribution conductors 6 AWG and larger, unless specifically indicated or approved by Engineer.

C. Connections and Terminations:
1. Install wire nuts only on solid conductors. Wire nuts are not allowed on stranded conductors.
2. Install nylon self-insulated crimp connectors and terminators for instrumentation and control, circuit conductors.
3. Install self-insulated, set screw wire connectors for two-way connection of power circuit conductors 12 AWG and smaller.
4. Install uninsulated crimp connectors and terminators for instrumentation, control, and power circuit conductors 4 AWG through 2/0 AWG.
5. Install uninsulated, bolted, two-way connectors and terminators for power circuit conductors 3/0 AWG and larger.
6. Install uninsulated terminators bolted together on motor circuit conductors 10 AWG and larger.
7. Place no more than one conductor in any single-barrel pressure connection.
8. Install crimp connectors with tools approved by connector manufacturer.
9. Install terminals and connectors acceptable for type of material used.
10. Compression Lugs:
    a. Attach with a tool specifically designed for purpose. Tool shall provide complete, controlled crimp and shall not release until crimp is complete.
    b. Do not use plier type crimpers.

D. Do not use soldered mechanical joints.

E. Splices and Terminations:
1. Insulate all uninsulated connections.
2. Indoors: Use general purpose, flame retardant tape or single wall heat shrink.
3. Outdoors, Dry Locations: Use flame retardant, cold- and weather resistant tape or single wall heat shrink.
4. Below Grade and Wet or Damp Locations: Use dual wall heat shrink.

F. Cap spare conductors with UL listed end caps.

G. Wiring Identification:

1. In addition to color coding, all wiring shall be identified at each point of termination. This includes but is not limited to identification at the source, load, and in any intermediate junction boxes where a termination is made. The Contractor shall meet with the Owner and Engineer to come to an agreement regarding a wire identification system prior to installation of any wiring. Wire numbers shall not be duplicated.

2. Wire identification shall be by means of a heat shrinkable sleeve. Sleeves shall have a white background with black text. Wire sizes #14 AWG through #10 AWG shall have a minimum text size of 7 points. Wire sizes #8 AWG and larger shall have a minimum text size of 10 points. Sleeves shall be of appropriate length to fit the required text. The use of handwritten text for wire identification shall not be permitted.

3. Sleeves shall be suitable for the size of wire on which they are installed. When installation is complete, sleeves shall be tightly affixed to the wire and shall not move. Sleeves shall be heat shrunk onto wiring with a heat gun approved for the application.

Sleeves shall not be heated by any means which employs the use of an open flame. The Contractor shall take special care to ensure that the wiring insulation is not damaged during the heating process.

4. Sleeves shall be installed prior to the completion of the wiring terminations and shall be oriented so that they can be easily read.
5. Sleeves shall be white polyolefin as manufactured by Brady, Seton equivalent, Panduit equivalent, or equal.
6. Where sleeves are not available in the size required for the wire, the Contractor shall use an adhesive label with a white background and black text. Text size shall be in accordance with the requirements listed above.
7. Adhesive labels, for the case when sleeves are not suitable for the wire size, shall be white permanent vinyl as manufactured by Brady, Seton equivalent, Panduit equivalent, or equal.
8. Wire identification in manholes, handholes, pull boxes, and other accessible components in the raceway system where the wiring is continuous shall be accomplished by means of a tag installed around the bundled group of conductors. Identification shall utilize a FROM-TO system. Each group of conductors shall consist of all of the individual conductors in a single conduit or duct. The tag shall have text that identifies the bundle in accordance with the 'FROM' and 'TO' column for that particular conduit number in the conduit and wire schedule. Minimum text size shall be 10 point. The tag shall be affixed to the wire bundle by the use of nylon wire ties, and shall be made of polyethylene as manufactured by Brady, Seton equivalent, Panduit equivalent, or equal.

H. Cabinets, Panels, and Motor Control Centers:
1. Remove surplus wire, bridle and secure.
2. Where conductors pass through openings or over edges in sheet metal, remove burrs, chamfer edges, and install bushings and protective strips of insulating material to protect the conductors.

I. Control and Instrumentation Wiring:
1. Where terminals provided will accept such lugs, terminate control and instrumentation wiring, except solid thermocouple leads, with insulated, locking-fork compression lugs.
2. Terminate with methods consistent with terminals provided, and in accordance with terminal manufacturer's instructions.
3. Locate splices in readily accessible cabinets or junction boxes using terminal strips.
4. Cable Protection:
   a. Under Infinite Access Floors: May install without bundling.
   b. All Other Areas: Install individual wires, pairs, or triads in flex conduit under floor or grouped into bundles at least 1/2 inch in diameter.
   c. Maintain integrity of shielding of instrumentation cables.
   d. Ensure grounds do not occur because of damage to jacket over the shield.

J. Extra Conductor Length: For conductors to be connected by others, install minimum 6 feet of extra conductor in freestanding panels and minimum 2 feet in other assemblies.

3.6 CONDUCTOR ARC AND FIREPROOFING

A. Wrap conductors of same circuit entering from separate conduit together as a single cable.

B. Follow tape manufacturer's installation instructions.

C. Secure tape at intervals of 5 feet with bands of tape binder. Each band to consist of a minimum of two wraps directly over each other.

3.7 UNDERGROUND DIRECT BURIAL CABLE

A. Warning Tape: Install approximately 3 inches above cable, aligned parallel to, and within 12 inches of centerline of the run.

END OF SECTION 260505

SECTION 260543 - UNDERGROUND DUCTS AND RACEWAYS FOR ELECTRICAL SYSTEMS

PART 1 - GENERAL

1.1 SUMMARY

A. Section Includes:

1. Metal conduits and fittings, including Aluminum conduit.
2. Rigid nonmetallic duct.
3. Flexible nonmetallic duct.
4. Duct accessories.
5. Precast concrete handholes.
6. Polymer concrete handholes and boxes with polymer concrete cover.
7. Fiberglass handholes and boxes with polymer concrete cover.
8. Fiberglass handholes and boxes.
9. High density plastic boxes.

1.2 DEFINITIONS

A. Direct Buried: Duct or a duct bank that is buried in the ground, without any additional casing materials such as concrete.

B. Duct: A single duct or multiple ducts. Duct may be either installed singly or as component of a duct bank.

C. Duct Bank:

1. Two or more ducts installed in parallel, with or without additional casing materials.
2. Multiple duct banks.

1.3 ACTION SUBMITTALS

A. Product Data: For each type of product.

B. Shop Drawings:

1. Factory-Fabricated Handholes and Boxes Other Than Precast Concrete:

a. Include dimensioned plans, sections, and elevations, and fabrication and installation details.
b. Include duct entry provisions, including locations and duct sizes.
c. Include cover design.
d. Include grounding details.
e. Include dimensioned locations of cable rack inserts, and pulling-in and lifting irons.

1.4 INFORMATIONAL SUBMITTALS

A. Duct and Duct-Bank Coordination Drawings: Show duct profiles and coordination with other utilities and underground structures. Drawings shall be signed and sealed by a qualified professional engineer.

B. Qualification Data: For professional engineer and testing agency responsible for testing nonconcrete handholes and boxes.

C. Product Certificates: For concrete and steel used in precast concrete handholes, as required by ASTM C 858.

D. Source quality-control reports.

E. Field quality-control reports.

1.5 QUALITY ASSURANCE

A. Testing Agency Qualifications: Qualified according to ASTM E 329 for testing indicated.

PART 2 - PRODUCTS

2.1 METAL CONDUIT AND FITTINGS

A. Aluminum: Comply with ANSI C80.1 and UL 6.

B. Listed and labeled as defined in NFPA 70, by a nationally recognized testing laboratory, and marked for intended location and application.

2.2 RIGID NONMETALLIC DUCT

A. Underground Plastic Utilities Duct: Type EPC-40-PVC RNC, complying with NEMA TC 2 and UL 651, with matching fittings complying with NEMA TC 3 by same manufacturer as duct.

B. Listed and labeled as defined in NFPA 70, by a nationally recognized testing laboratory, and marked for intended location and application.

C. Solvents and Adhesives: As recommended by conduit manufacturer.

2.3 DUCT ACCESSORIES

A. Duct Spacers: Factory-fabricated, rigid, PVC interlocking spacers; sized for type and size of duct with which used, and selected to provide minimum duct spacing indicated while supporting duct during concreting or backfilling.

B. Underground-Line Warning Tape: Comply with requirements for underground-line warning tape specified in Section 260553 "Identification for Electrical Systems."

2.4 POLYMER CONCRETE HANDHOLES AND BOXES WITH POLYMER CONCRETE COVER

A. Description: Molded of sand and aggregate, bound together with a polymer resin, and reinforced with steel or fiberglass or a combination of the two.

B. Standard: Comply with SCTE 77. Comply with tier requirements in "Underground Enclosure Application" Article.

C. Color: Gray.

D. Configuration: Units shall be designed for flush burial and have open bottom unless otherwise indicated.

E. Cover: Weatherproof, secured by tamper-resistant locking devices and having structural load rating consistent with enclosure.

F. Cover Finish: Nonskid finish shall have a minimum coefficient of friction of 0.50.

G. Cover Legend: Molded lettering, "ELECTRIC"

H. Direct-Buried Wiring Entrance Provisions: Knockouts equipped with insulated bushings or end-bell fittings, selected to suit box material, sized for wiring indicated, and arranged for secure, fixed installation in enclosure wall.

I. Retain "Duct Entrance Provisions" Paragraph below if duct enters enclosure through side. Otherwise, entry shall be made through an open bottom or through side openings cut in the field. Coordinate with Drawings.

J. Duct Entrance Provisions: Duct-terminating fittings shall mate with entering duct for secure, fixed installation in enclosure wall.

K. Handholes 24 inches wide by 24 inches long and larger shall have factory-installed inserts for cable racks and pulling-in irons.

2.5 SOURCE QUALITY CONTROL

A. Test and inspect precast concrete utility structures according to ASTM C 1037.

B. Nonconcrete Handhole and Pull-Box Prototype Test: Test prototypes of and boxes for compliance with SCTE 77. Strength tests shall be for specified tier ratings of products supplied.

1. Tests of materials shall be performed by an independent testing agency.
2. Strength tests of complete boxes and covers shall be by an independent testing agency or manufacturer. A qualified registered professional engineer shall certify tests by manufacturer.
3. Testing machine pressure gages shall have current calibration certification, complying with ISO 9000 and ISO 10012, and traceable to NIST standards.

PART 3 - EXECUTION

3.1 PREPARATION

A. Coordinate layout and installation of duct, duct bank, handholes, and boxes with final arrangement of other utilities, site grading, and surface features as determined in the field. Notify Architect if there is a conflict between areas of excavation and existing structures or archaeological sites to remain.

B. Coordinate elevations of duct and duct-bank entrances into handholes, and boxes with final locations and profiles of duct and duct banks, as determined by coordination with other utilities, underground obstructions, and surface features. Revise locations and elevations as required to suit field conditions and to ensure that duct and duct bank will drain to handholes, and as approved by Architect.

3.2 UNDERGROUND DUCT APPLICATION

A. Duct for Electrical Feeders 600 V and Less: RNC Type EPC-40-PVC, direct-buried unless otherwise indicated.

B. Duct for Electrical Branch Circuits: RNC Type EPC-40-PVC, direct-buried unless otherwise indicated.

C. Underground Ducts Crossing Paved Paths, Driveways and Roadways: RNC Type EPC-40 PVC, encased in reinforced concrete.

3.3 UNDERGROUND ENCLOSURE APPLICATION

A. Handholes and Boxes for 600 V and Less:

1. Units in Roadways and Other Deliberate Traffic Paths: Precast concrete. AASHTO HB 17, H-20 structural load rating.
2. Units in Driveway, Parking Lot, and Off-Roadway Locations, Subject to Occasional, Nondeliberate Loading by Heavy Vehicles: Polymer concrete, SCTE 77, Tier 15 structural load rating.
3. Units in Sidewalk and Similar Applications with a Safety Factor for Nondeliberate Loading by Vehicles: Polymer concrete units, SCTE 77, Tier 8 structural load rating.
4. Cover design load shall not exceed the design load of the handhole or box.

3.4 EARTHWORK

A. Excavation and Backfill: Comply with standard practices for excavation and backfill but do not use heavy-duty, hydraulic-operated, compaction equipment.

B. Restoration: Replace area immediately after backfilling is completed or after construction vehicle traffic in immediate area is complete.

C. Restore surface features at areas disturbed by excavation, and re-establish original grades unless otherwise indicated. Replace removed sod immediately after backfilling is completed.

D. Restore areas disturbed by trenching, storing of dirt, cable laying, and other work. Restore vegetation and include necessary topsoiling, fertilizing, liming, seeding, sodding, sprigging, and mulching.

E. Cut and patch existing pavement in the path of underground duct, duct bank, and underground structures.

3.5 DUCT AND DUCT-BANK INSTALLATION

A. Where indicated on Drawings, install duct, spacers, and accessories into the duct-bank configuration shown. Duct installation requirements in this Section also apply to duct bank.

B. Install duct according to NEMA TCB 2.

C. Slope: Pitch duct a minimum slope of 1:300 down toward handholes and away from buildings and equipment. Slope duct from a high point between two handholes, to drain in both directions.

D. Curves and Bends: Use 5-degree angle couplings for small changes in direction. Use manufactured long sweep bends with a minimum radius of 48 inches, both horizontally and vertically, at other locations unless otherwise indicated.

1. Duct shall have maximum of two 90 degree bends or the total of all bends shall be no more 180 degrees between pull points.

E. Joints: Use solvent-cemented joints in duct and fittings and make watertight according to manufacturer's written instructions. Stagger couplings so those of adjacent duct do not lie in same plane.

F. Installation Adjacent to High-Temperature Steam Lines: Where duct is installed parallel to underground steam lines, perform calculations showing the duct will not be subject to environmental temperatures above 40 deg C. Where environmental temperatures are calculated to rise above 40 deg C, and anywhere the duct crosses above an underground steam line, install insulation blankets listed for direct burial to isolate the duct bank from the steam line.

G. End Bell Entrances to Polymer Concrete Handholes: Use end bells, spaced approximately 10 inches o.c. for 5-inch duct, and vary proportionately for other duct sizes.

H. Terminator Entrances to Polymer Concrete Handholes: Use manufactured, cast-in-place duct terminators, with entrances into structure spaced approximately 6 inches o.c. for 4-inch duct, and vary proportionately for other duct sizes.

I. Coordinate design of concrete-encased duct approaching building wall penetrations with building structural design to support ducts at wall, without reducing structural or watertight integrity of building. Do not use steel conduit, with or without PVC coating, in highly corrosive soils. Coordinate with Drawings.

J. Building Wall Penetrations: Make a transition from underground duct to exposed conduit at least 10 feet outside the building wall, without reducing duct line slope away from the building and without forming a trap in the line. Use fittings manufactured for RNC-to-Aluminum transition. Install conduits penetrations of building walls.

K. Sealing: Provide temporary closure at terminations of duct with pulled cables. Seal spare duct at terminations. Use sealing compound and plugs to withstand at least 15-psig hydrostatic pressure.

L. Pulling Cord: Install 200-lbf-test nylon cord in empty ducts.

M. Direct-Buried Duct and Duct Bank:

1. Excavate trench bottom to provide firm and uniform support for duct. Comply with standard practices for preparation of trench bottoms for pipes less than 6 inches in nominal diameter.
2. Width: Excavate trench 12 inches wider than duct on each side.
3. Width: Excavate trench 3 inches wider than duct on each side.
4. Depth: Install top of duct at least 36 inches below finished grade unless otherwise indicated.
5. Set elevation of bottom of duct bank below frost line.

6. Support ducts on duct spacers coordinated with duct size, duct spacing, and outdoor temperature.
7. Spacer Installation: Place spacers close enough to prevent sagging and deforming of duct, with not less than four spacers per 20 feet of duct. Place spacers within 24 inches of duct ends. Stagger spacers approximately 6 inches between tiers. Secure spacers to earth and to ducts to prevent floating during concreting. Tie entire assembly together using fabric straps; do not use tie wires or reinforcing steel that may form conductive or magnetic loops around ducts or duct groups.
8. Install duct with a minimum of 3 inches between ducts for like services and 6 inches between power and communications duct.
9. Elbows: Install manufactured duct elbows for stub-ups, at building entrances, and at changes of direction in duct direction unless otherwise indicated. Encase elbows for stub-up ducts throughout length of elbow.
10. Install manufactured Aluminum elbows for stub-ups, at building entrances, and at changes of direction in duct.
11. After installing first tier of duct, backfill and compact. Start at tie-in point and work toward end of duct run, leaving ducts at end of run free to move with expansion and contraction as temperature changes during this process. Repeat procedure after placing each tier. After placing last tier, hand place backfill to 4 inches over duct and hand tamp. Firmly tamp backfill around ducts to provide maximum supporting strength. Use hand tamper only. After placing controlled backfill over final tier, make final duct connections at end of run and complete backfilling with normal compaction. Comply with standard practices for installation of backfill materials.

    a. Place minimum 3 inches of sand as a bed for duct. Place sand to a minimum of 6 inches above top level of duct.
    b. Place minimum 6 inches of engineered fill above concrete encasement of duct.

N. Underground-Line Warning Tape: Bury magnetic underground line specified in Section 260553 "Identification for Electrical Systems" no less than 12 inches above all duct banks and approximately 12 inches below grade. Align tape parallel to and within 3 inches of centerline of duct bank. Provide an additional warning tape for each 12-inch increment of ductbank width over a nominal 18 inches. Space additional tapes 12 inches apart, horizontally.

3.6 INSTALLATION OF HANDHOLES AND BOXES OTHER THAN PRECAST CONCRETE

A. Install handholes and boxes level and plumb and with orientation and depth coordinated with connecting duct, to minimize bends and deflections required for proper entrances. Use box extension if required to match depths of duct, and seal joint between box and extension as recommended by manufacturer.

B. Unless otherwise indicated, support units on a level bed of crushed stone or gravel, graded from 1/2-inch sieve to No. 4 sieve and compacted to same density as adjacent undisturbed earth.

C. Elevation: In paved areas and trafficways, set cover flush with finished grade. Set covers of other handholes 1 inch above finished grade.

D. Install handholes and boxes with bottom below frost line.

E. Install removable hardware, including pulling eyes, cable stanchions, cable arms, and insulators, as required for installation and support of cables and conductors and as

indicated. Select arm lengths to be long enough to provide spare space for future cables, but short enough to preserve adequate working clearances in enclosure.

F. Field cut openings for duct according to enclosure manufacturer's written instructions. Cut wall of enclosure with a tool designed for material to be cut. Size holes for terminating fittings to be used, and seal around penetrations after fittings are installed.

G. For enclosures installed in asphalt paving and subject to occasional, nondeliberate, heavy-vehicle loading, form and pour a concrete ring encircling, and in contact with, enclosure and with top surface screeded to top of box cover frame. Bottom of ring shall rest on compacted earth.

1. Concrete: 3000 psi, 28-day strength, complying with Section 033000 "Cast-in-Place Concrete," with a troweled finish.
2. Dimensions: 12 inches wide by 12 inches deep.

3.7 GROUNDING

A. Ground underground ducts and utility structures according to Section 260526 "Grounding and Bonding for Electrical Systems."

3.8 FIELD QUALITY CONTROL

A. Perform the following tests and inspections:

1. Demonstrate capability and compliance with requirements on completion of installation of underground duct, duct bank, and utility structures.
2. Pull solid aluminum or wood test mandrel through duct to prove joint integrity and adequate bend radii, and test for out-of-round duct. Provide a minimum 12-inch-long mandrel equal to duct size minus 1/4 inch. If obstructions are indicated, remove obstructions and retest.
3. Test handhole grounding to ensure electrical continuity of grounding and bonding connections. Measure and report ground resistance as specified in Section 260526 "Grounding and Bonding for Electrical Systems."

B. Correct deficiencies and retest as specified above to demonstrate compliance.

C. Prepare test and inspection reports.

3.9 CLEANING

A. Pull leather-washer-type duct cleaner, with graduated washer sizes, through full length of duct until duct cleaner indicates that duct is clear of dirt and debris. Follow with rubber duct swab for final cleaning and to assist in spreading lubricant throughout ducts.

B. Clean internal surfaces of handholes, including sump.

1. Sweep floor, removing dirt and debris.
2. Remove foreign material.

END OF SECTION 260543

SECTION 260553 - IDENTIFICATION FOR ELECTRICAL SYSTEMS

PART 1 - GENERAL

1.1 SUMMARY

A. Section Includes:

1. Color and legend requirements for raceways, conductors, and warning labels and signs.
2. Labels.
3. Bands and tubes.
4. Tapes and stencils.
5. Tags.
6. Signs.
7. Cable ties.
8. Paint for identification.
9. Fasteners for labels and signs.

1.2 ACTION SUBMITTALS

A. Product Data: For each type of product.

B. Samples: For each type of label and sign to illustrate composition, size, colors, lettering style, mounting provisions, and graphic features of identification products.

PART 2 - PRODUCTS

2.1 PERFORMANCE REQUIREMENTS

A. Comply with ASME A13.1.

B. Comply with NFPA 70.

C. Comply with 29 CFR 1910.144 and 29 CFR 1910.145.

D. Comply with ANSI Z535.4 for safety signs and labels.

E. Adhesive-attached labeling materials, including label stocks, laminating adhesives, and inks used by label printers, shall comply with UL 969.

F. Thermal Movements: Allow for thermal movements from ambient and surface temperature changes.

1. Temperature Change: 120 deg F, ambient; 180 deg F, material surfaces.

2.2 COLOR AND LEGEND REQUIREMENTS

A. Raceways and Cables Carrying Circuits at 600 V or Less:

1. Black letters on an orange field.
2. Legend: Indicate voltage and system or service type.

B. Color-Coding for Phase- and Voltage-Level Identification, 600 V or Less: Use colors listed below for ungrounded service, feeder and branch-circuit conductors.

1. Color shall be factory applied or field applied for sizes larger than No. 8 AWG if authorities having jurisdiction permit.
2. Colors for 208/120-V Circuits:

   a. Phase A: Black.
   b. Phase B: Red.
   c. Phase C: Blue.

3. Colors for 240-V Circuits:

   a. Phase A: Black.
   b. Phase B: Red.

4. Colors for 480/277-V Circuits:

   a. Phase A: Brown.
   b. Phase B: Orange.
   c. Phase C: Yellow.

5. Color for Neutral: White.
6. Color for Equipment Grounds: Green.
7. Colors for Isolated Grounds: Green with white stripe.

C. Warning Label Colors:

1. Identify system voltage with black letters on an orange background.

D. Warning labels and signs shall include, but are not limited to, the following legends:

1. Multiple Power Source Warning: "DANGER - ELECTRICAL SHOCK HAZARD - EQUIPMENT HAS MULTIPLE POWER SOURCES."
2. Workspace Clearance Warning: "WARNING - OSHA REGULATION - AREA IN FRONT OF ELECTRICAL EQUIPMENT MUST BE KEPT CLEAR FOR 36 INCHES."

E. Equipment Identification Labels:

1. Black letters on a white field.

2.3 LABELS

A. Vinyl Wraparound Labels: Preprinted, flexible labels laminated with a clear, weather- and chemical-resistant coating and matching wraparound clear adhesive tape for securing label ends.

B. Snap-around Labels: Slit, pretensioned, flexible, preprinted, color-coded acrylic sleeves, with diameters sized to suit diameter and that stay in place by gripping action.

C. Self-Adhesive Wraparound Labels: Preprinted, 3-mil-thick, polyester flexible label with acrylic pressure-sensitive adhesive.
1. Self-Lamination: Clear; UV-, weather- and chemical-resistant; self-laminating, protective shield over the legend. Labels sized such that the clear shield overlaps the entire printed legend.
2. Marker for Labels: Permanent, waterproof, black ink marker recommended by tag manufacturer.
3. Marker for Labels: Machine-printed, permanent, waterproof, black ink recommended by printer manufacturer.

D. Self-Adhesive Labels: Polyester, thermal, transfer-printed, 3-mil-thick, multicolor, weather- and UV-resistant, pressure-sensitive adhesive labels, configured for intended use and location.
1. Minimum Nominal Size:

a. 1-1/2 by 6 inches for raceway and conductors.
b. 3-1/2 by 5 inches for equipment.
c. As required by authorities having jurisdiction.

2.4 BANDS AND TUBES

A. Snap-around, Color-Coding Bands: Slit, pretensioned, flexible, solid-colored acrylic sleeves, 2 inches long, with diameters sized to suit diameter and that stay in place by gripping action.

B. Heat-Shrink Preprinted Tubes: Flame-retardant polyolefin tubes with machine-printed identification labels, sized to suit diameters of and shrunk to fit firmly around item being identified. Full shrink recovery occurs at a maximum of 200 deg F. Comply with UL 224.

2.5 TAPES AND STENCILS

A. Marker Tapes: Vinyl or vinyl-cloth, self-adhesive wraparound type, with circuit identification legend machine printed by thermal transfer or equivalent process.

B. Self-Adhesive Vinyl Tape: Colored, heavy duty, waterproof, fade resistant; not less than 3 mils thick by 1 to 2 inches wide; compounded for outdoor use.

C. Tape and Stencil: 4-inch-wide black stripes on 10-inch centers placed diagonally over orange background and is 12 inches wide. Stop stripes at legends.

D. Floor Marking Tape: 2-inch-wide, 5-mil pressure-sensitive vinyl tape, with black and white stripes and clear vinyl overlay.

E. Underground-Line Warning Tape:
1. Tape:

a. Recommended by manufacturer for the method of installation and suitable to identify and locate underground electrical utility lines.

b. Printing on tape shall be permanent and shall not be damaged by burial operations.
c. Tape material and ink shall be chemically inert and not subject to degradation when exposed to acids, alkalis, and other destructive substances commonly found in soils.

2. Color and Printing:

a. Comply with ANSI Z535.1, ANSI Z535.2, ANSI Z535.3, ANSI Z535.4, and ANSI Z535.5.
b. Inscriptions for Red-Colored Tapes: "ELECTRIC LINE, HIGH VOLTAGE”.
c. Inscriptions for Orange-Colored Tapes: "TELEPHONE CABLE, CATV CABLE, COMMUNICATIONS CABLE, OPTICAL FIBER CABLE".

3. Tag: Type I:

a. Pigmented polyolefin, bright colored, continuous-printed on one side with the inscription of the utility, compounded for direct-burial service.
b. Width: 3 inches.
c. Thickness: 4 mils.
d. Weight: 18.5 lb/1000 sq. ft.
e. Tensile according to ASTM D 882: 30 lbf and 2500 psi.

4. Tag: Type ID:

a. Detectable three-layer laminate, consisting of a printed pigmented polyolefin film, a solid aluminum-foil core, and a clear protective film that allows inspection of the continuity of the conductive core; bright colored, continuous-printed on one side with the inscription of the utility, compounded for direct-burial service.
b. Width: 3 inches.
c. Overall Thickness: 5 mils.
d. Foil Core Thickness: 0.35 mil.
e. Weight: 28 lb/1000 sq. ft.
f. Tensile according to ASTM D 882: 70 lbf and 4600 psi.

F. Stenciled Legend: In nonfading, waterproof, black ink or paint. Minimum letter height shall be 1 inch.

2.6 TAGS

A. Write-on Tags:
1. Polyester Tags: 0.010-inch-thick, with corrosion-resistant grommet and cable tie for attachment.
2. Marker for Tags: Permanent, waterproof, black ink marker recommended by tag manufacturer.
3. Marker for Tags: Machine-printed, permanent, waterproof, black ink marker recommended by printer manufacturer.

2.7 CABLE TIES

A. General-Purpose Cable Ties: Fungus inert, self-extinguishing, one piece, self-locking, and Type 6/6 nylon.

1. Minimum Width: 3/16 inch.
2. Tensile Strength at 73 Deg F according to ASTM D 638: 12,000 psi.
3. Temperature Range: Minus 40 to plus 185 deg F.
4. Color: Black, except where used for color-coding.

B. UV-Stabilized Cable Ties: Fungus inert, designed for continuous exposure to exterior sunlight, self-extinguishing, one piece, self-locking, and Type 6/6 nylon.

1. Minimum Width: 3/16 inch.
2. Tensile Strength at 73 Deg F according to ASTM D 638: 12,000 psi.
3. Temperature Range: Minus 40 to plus 185 deg F.
4. Color: Black.

C. Plenum-Rated Cable Ties: Self-extinguishing, UV stabilized, one piece, and self-locking.

1. Minimum Width: 3/16 inch.
2. Tensile Strength at 73 Deg F according to ASTM D 638: 7000 psi.
3. UL 94 Flame Rating: 94V-0.
4. Temperature Range: Minus 50 to plus 284 deg F.
5. Color: Black.

2.8 MISCELLANEOUS IDENTIFICATION PRODUCTS

A. Paint: Comply with requirements in painting Sections for paint materials and application requirements. Retain paint system applicable for surface material and location (exterior or interior).

B. Fasteners for Labels and Signs: Self-tapping, stainless-steel screws or stainless-steel machine screws with nuts and flat and lock washers.

PART 3 - EXECUTION

3.1 INSTALLATION

A. Verify and coordinate identification names, abbreviations, colors, and other features with requirements in other Sections requiring identification applications, Drawings, Shop Drawings, manufacturer's wiring diagrams, and operation and maintenance manual. Use consistent designations throughout Project.

B. Install identifying devices before installing acoustical ceilings and similar concealment.

C. Verify identity of each item before installing identification products.

D. Coordinate identification with Project Drawings, manufacturer's wiring diagrams, and operation and maintenance manual.

E. Apply identification devices to surfaces that require finish after completing finish work.

F. Install signs with approved legend to facilitate proper identification, operation, and maintenance of electrical systems and connected items.

G. Self-Adhesive Identification Products: Before applying electrical identification products, clean substrates of substances that could impair bond, using materials and methods recommended by manufacturer of identification product.

H. System Identification for Raceways and Cables under 600 V: Identification shall completely encircle cable or conduit. Place identification of two-color markings in contact, side by side.

1. Secure tight to surface of conductor, cable, or raceway.

I. System Identification for Raceways and Cables over 600 V: Identification shall completely encircle cable or conduit. Place adjacent identification of two-color markings in contact, side by side.

1. Secure tight to surface of conductor, cable, or raceway.

J. Auxiliary Electrical Systems Conductor Identification: Identify field-installed alarm, control, and signal connections.

K. Elevated Components: Increase sizes of labels, signs, and letters to those appropriate for viewing from the floor.

L. Accessible Fittings for Raceways: Identify the covers of each junction and pull box of the following systems with the wiring system legend and system voltage. System legends shall be as follows:

1. "EMERGENCY POWER."
2. "POWER."
3. "UPS."

M. Vinyl Wraparound Labels:

1. Secure tight to surface at a location with high visibility and accessibility.
2. Attach labels that are not self-adhesive type with clear vinyl tape, with adhesive appropriate to the location and substrate.

N. Snap-around Labels: Secure tight to surface at a location with high visibility and accessibility.

O. Self-Adhesive Wraparound Labels: Secure tight to surface of raceway or cable at a location with high visibility and accessibility.

P. Self-Adhesive Labels:

1. On each unit of equipment, install unique designation label that is consistent with wiring diagrams, schedules, and operation and maintenance manual.
2. Unless otherwise indicated, provide a single line of text with 1/2-inch-high letters on 1-1/2-inch-high label; where two lines of text are required, use labels 2 inches high.

Q. Snap-around Color-Coding Bands: Secure tight to surface at a location with high visibility and accessibility.

R. Heat-Shrink, Preprinted Tubes: Secure tight to surface at a location with high visibility and accessibility.

S. Marker Tapes: Secure tight to surface at a location with high visibility and accessibility.

T. Self-Adhesive Vinyl Tape: Secure tight to surface at a location with high visibility and accessibility.

1. Field-Applied, Color-Coding Conductor Tape: Apply in half-lapped turns for a minimum distance of 6 inches where splices or taps are made. Apply last two turns of tape with no tension to prevent possible unwinding.

U. Tape and Stencil: Comply with requirements in painting Sections for surface preparation and paint application.

V. Floor Marking Tape: Apply stripes to finished surfaces following manufacturer's written instructions.

W. Underground Line Warning Tape:

1. During backfilling of trenches, install continuous underground-line warning tape directly above cable or raceway at 6 to 8 inches below finished grade. Use multiple tapes where width of multiple lines installed in a common trench or concrete envelope exceeds 16 inches overall.
2. Limit use of underground-line warning tape to direct-buried cables.
3. Install underground-line warning tape for direct-buried cables and cables in raceways.

X. Write-on Tags:

1. Place in a location with high visibility and accessibility.
2. Secure using corrosion resistant cable ties.

Y. Baked-Enamel Signs:

1. Attach signs that are not self-adhesive type with mechanical fasteners appropriate to the location and substrate.
2. Unless otherwise indicated, provide a single line of text with 1/2-inch-high letters on minimum 1-1/2-inch-high sign; where two lines of text are required, use signs minimum 2 inches high.

Z. Metal-Backed Butyrate Signs:

1. Attach signs that are not self-adhesive type with mechanical fasteners appropriate to the location and substrate.
2. Unless otherwise indicated, provide a single line of text with 1/2-inch-high letters on minimum 1-1/2-inch-high sign; where two lines of text are required, use signs minimum 2 inches high.

AA. Laminated Acrylic or Melamine Plastic Signs:

1. Attach signs and plastic labels that are not self-adhesive type with mechanical fasteners appropriate to the location and substrate.
2. Unless otherwise indicated, provide a single line of text with 1/2-inch-high letters on minimum 1-1/2-inch-high sign; where two lines of text are required, use signs minimum 2 inches high.

BB. Cable Ties: General purpose, for attaching tags, except as listed below:

1. Outdoors: UV-stabilized nylon.
2. In Spaces Handling Environmental Air: Plenum rated.

3.2 IDENTIFICATION SCHEDULE

A. Install identification materials and devices at locations for most convenient viewing without interference with operation and maintenance of equipment. Install access doors or panels to provide view of identifying devices.

B. Identify conductors, cables, and terminals in enclosures and at junctions, terminals, pull points, and locations of high visibility. Identify by system and circuit designation.

C. Accessible Raceways and Metal-Clad Cables, 600 V or Less, for Service, Feeder, and Branch Circuits, More Than 30 A and 120 V to Ground: Identify with self-adhesive raceway labels.

1. Locate identification at changes in direction, at penetrations of walls and floors, at 50-foot maximum intervals in straight runs, and at 25-foot maximum intervals in congested areas.

D. Accessible Fittings for Raceways and Cables within Buildings: Identify the covers of each junction and pull box of the following systems with self-adhesive labels containing the wiring system legend and system voltage. System legends shall be as follows:
1. "POWER"
2. "CONTROLS"
3. “SIGNALS”

E. Power-Circuit Conductor Identification, 600 V or Less: For conductors in vaults, pull and junction boxes, manholes, and handholes, use vinyl wraparound labels to identify the phase.

1. Locate identification at changes in direction, at penetrations of walls and floors, at 50-foot maximum intervals in straight runs, and at 25-foot maximum intervals in congested areas.

F. Control-Circuit Conductor Identification: For conductors and cables in pull and junction boxes, manholes, and handholes, use self-adhesive wraparound labels with the conductor or cable designation, origin, and destination.

G. Control-Circuit Conductor Termination Identification: For identification at terminations, provide heat-shrink preprinted tubes with the conductor designation.

H. Conductors to Be Extended in the Future: Attach marker tape to conductors and list source.

I. Locations of Underground Lines: Underground-line warning tape for power, lighting, communication, and control wiring and optical-fiber cable.

J. Workspace Indication: Apply floor marking tape to finished surfaces. Show working clearances in the direction of access to live parts. Workspace shall comply with NFPA 70 and 29 CFR 1926.403 unless otherwise indicated. Do not install at flush-mounted panelboards and similar equipment in finished spaces.

K. Instructional Signs: Self-adhesive labels, including the color code for grounded and ungrounded conductors.

L. Warning Labels for Indoor Cabinets, Boxes, and Enclosures for Power and Lighting: Self-adhesive equipment labels.

1. Apply to exterior of door, cover, or other access.
2. For equipment with multiple power or control sources, apply to door or cover of equipment, including, but not limited to, the following:

    a. Power-transfer switches.
    b. Controls with external control power connections.

M. Equipment Identification Labels:

1. Indoor Equipment: self-adhesive label.
2. Outdoor Equipment: Laminated acrylic or melamine sign.

END OF SECTION 260553

SECTION 262213 - LOW-VOLTAGE DISTRIBUTION TRANSFORMERS

PART 1 - GENERAL

1.1 SUMMARY

A. Section includes distribution, dry-type transformers with a nominal primary and secondary rating of 600 V and less, with capacities up to 1500 kVA.

1.2 ACTION SUBMITTALS

A. Product Data: For each type of product.

B. Shop Drawings:

1. Detail equipment assemblies and indicate dimensions, weights, loads, required clearances, method of field assembly, components, and location and size of each field connection.
2. Vibration Isolation Base Details: Detail fabrication including anchorages and attachments to structure and to supported equipment.
3. Include diagrams for power, signal, and control wiring.

1.3 INFORMATIONAL SUBMITTALS

A. Seismic Qualification Data: Certificates, for transformers, accessories, and components, from manufacturer.

B. Source quality-control reports.

C. Field quality-control reports.

1.4 CLOSEOUT SUBMITTALS

A. Operation and maintenance data.

1.5 QUALITY ASSURANCE

A. Testing Agency Qualifications: Accredited by NETA.

1. Testing Agency's Field Supervisor: Certified by NETA to supervise on-site testing.

PART 2 - PRODUCTS

2.1 MANUFACTURERS

A. Eaton

B. General Electric

C. Square D

D. Engineer Approved Equal.

2.2 PERFORMANCE REQUIREMENTS

A. Seismic Performance: Transformers shall withstand the effects of earthquake motions determined according to ASCE/SEI 7.

1. The term "withstand" means "the transformer will remain in place without separation of any parts when subjected to the seismic forces specified."

2.3 GENERAL TRANSFORMER REQUIREMENTS

A. Description: Factory-assembled and -tested, air-cooled units for 60-Hz service.

B. Comply with NFPA 70.

1. Electrical Components, Devices, and Accessories: Listed and labeled as defined in NFPA 70, by a qualified testing agency, and marked for intended location and use.

C. Transformers Rated 15 kVA and Larger:

1. Comply with 10 CFR 431 (DOE 2016) efficiency levels.
2. Marked as compliant with DOE 2016 efficiency levels by an NRTL.

D. Encapsulation: Transformers smaller than 30 kVA shall have core and coils completely resin encapsulated.

E. Cores: Electrical grade, non-aging silicon steel with high permeability and low hysteresis losses.

F. Coils: Continuous windings without splices except for taps.

1. Coil Material: Copper.
2. Internal Coil Connections: Brazed or pressure type.
3. Terminal Connections: Bolted.

G. Shipping Restraints: Paint or otherwise color-code bolts, wedges, blocks, and other restraints that are to be removed after installation and before energizing. Use fluorescent colors that are easily identifiable inside the transformer enclosure.

2.4 DISTRIBUTION TRANSFORMERS

A. Comply with NFPA 70, and list and label as complying with UL 1561.

B. Provide transformers that are constructed to withstand LOCAL seismic conditions.

C. Cores: One leg per phase.

D. Enclosure: Totally enclosed, nonventilated.

1. NEMA 250, Type 12: Core and coil shall be encapsulated within resin compound using a vacuum-pressure impregnation process to seal out moisture and air.
2. KVA Ratings: Based on convection cooling only and not relying on auxiliary fans.
3. Wiring Compartment: Sized for conduit entry and wiring installation.

E. Taps for Transformers 3 kVA and Smaller: None.

F. Taps for Transformers 7.5 to 24 kVA: One 5 percent tap above and one 5 percent tap below normal full capacity.

G. Taps for Transformers 25 kVA and Larger: Two 2.5 percent taps above and two 2.5 percent taps below normal full capacity.

H. Insulation Class, Smaller than 30 kVA: 180 deg C, UL-component-recognized insulation system with a maximum of 115 deg C rise above 40 deg C ambient temperature.

I. Insulation Class, 30 kVA and Larger: 220 deg C, UL-component-recognized insulation system with a maximum of 150 deg C rise above 40 deg C ambient temperature.

J. Grounding: Provide ground-bar kit or a ground bar installed on the inside of the transformer enclosure.

K. Wall Brackets: Manufacturer's standard brackets.

2.5 IDENTIFICATION

A. Nameplates: Engraved, laminated-acrylic or melamine plastic signs for each distribution transformer, mounted with corrosion-resistant screws. Nameplates and label products are specified in Section 260553 "Identification for Electrical Systems."

B. Nameplates: Self-adhesive label for each distribution transformer. Self-adhesive labels are specified in Section 260553 "Identification for Electrical Systems."

PART 3 - EXECUTION

3.1 EXAMINATION

A. Examine conditions for compliance with enclosure- and ambient-temperature requirements for each transformer.

B. Verify that field measurements are as needed to maintain working clearances required by NFPA 70 and manufacturer's written instructions.

C. Examine walls, floors, roofs, and concrete bases for suitable mounting conditions where transformers will be installed.

D. Verify that ground connections are in place and requirements in Section 260526 "Grounding and Bonding for Electrical Systems" have been met. Maximum ground resistance shall be 5 ohms at location of transformer.

E. Environment: Enclosures shall be rated for the environment in which they are located. Covers for NEMA 250, Type 4X enclosures shall not cause accessibility problems.

3.2 INSTALLATION

A. Install wall-mounted transformers level and plumb with wall brackets fabricated by transformer manufacturer.

1. Coordinate installation of wall-mounted and structure-hanging supports with actual transformer provided.

B. Install transformers level and plumb on a concrete base with vibration-dampening supports. Locate transformers away from corners and not parallel to adjacent wall surface.

C. Secure transformer to concrete base according to manufacturer's written instructions.

D. Secure covers to enclosure and tighten all bolts to manufacturer-recommended torques to reduce noise generation.

E. Remove shipping bolts, blocking, and wedges.

3.3 CONNECTIONS

A. Ground equipment to the building grounding system according to Electrical drawings.

B. Connect wiring according to Electrical drawings.

C. Tighten electrical connectors and terminals according to manufacturer's published torque-tightening values. If manufacturer's torque values are not indicated, use those specified in UL 486A-486B.

D. Provide flexible connections at all conduit and conductor terminations and supports to eliminate sound and vibration transmission to the building structure.

3.4 FIELD QUALITY CONTROL

A. Testing Agency: Owner will engage a qualified testing agency to perform tests and inspections.

B. Testing Agency: Engage a qualified testing agency to perform tests and inspections.

C. Perform tests and inspections as required.

D. Small (Up to 167-kVA Single-Phase or 500-kVA Three-Phase) Dry-Type Transformer Field Tests:

1. Visual and Mechanical Inspection.

a. Inspect physical and mechanical condition.
b. Inspect anchorage, alignment, and grounding.
c. Verify that resilient mounts are free and that any shipping brackets have been removed.

d. Verify the unit is clean.
e. Perform specific inspections and mechanical tests recommended by manufacturer.
f. Verify that as-left tap connections are as specified.
g. Verify the presence of surge arresters and that their ratings are as specified.

2. Electrical Tests:

a. Measure resistance at each winding, tap, and bolted connection.
b. Perform insulation-resistance tests winding-to-winding and each winding-to-ground. Apply voltage according to manufacturer's published data. In the absence of manufacturer's published data, comply with NETA ATS, Table 100.5. Calculate polarization index: the value of the index shall not be less than 1.0.
c. Perform turns-ratio tests at all tap positions. Test results shall not deviate by more than one-half percent from either the adjacent coils or the calculated ratio. If test fails, replace the transformer.
d. Verify correct secondary voltage, phase-to-phase and phase-to-neutral, after energization and prior to loading.

E. Remove and replace units that do not pass tests or inspections and retest as specified above.

F. Test Labeling: On completion of satisfactory testing of each unit, attach a dated and signed "Satisfactory Test" label to tested component.

3.5 CLEANING

A. Vacuum dirt and debris; do not use compressed air to assist in cleaning.

END OF SECTION 262213

SECTION 262416 - PANELBOARDS

PART 1 - GENERAL

1.1 SUMMARY

A. Section Includes:
1. Distribution panelboards.
2. Lighting and appliance branch-circuit panelboards.

1.2 DEFINITIONS

A. MCCB: Molded-case circuit breaker.

B. SPD: Surge protective device.

1.3 ACTION SUBMITTALS

A. Product Data: For each type of panelboard.

B. Shop Drawings: For each panelboard and related equipment.

1. Include dimensioned plans, elevations, sections, and details.
2. Detail enclosure types including mounting and anchorage, environmental protection, knockouts, corner treatments, covers and doors, gaskets, hinges, and locks.
3. Detail bus configuration, current, and voltage ratings.
4. Short-circuit current rating of panelboards and overcurrent protective devices.
5. Include evidence of NRTL listing for series rating of installed devices.
6. Include evidence of NRTL listing for SPD as installed in panelboard.
7. Detail features, characteristics, ratings, and factory settings of individual overcurrent protective devices and auxiliary components.
8. Include wiring diagrams for power, signal, and control wiring.
9. Key interlock scheme drawing and sequence of operations.
10. Include time-current coordination curves for each type and rating of overcurrent protective device included in panelboards.

1.4 INFORMATIONAL SUBMITTALS

A. Panelboard schedules for installation in panelboards.

1.5 CLOSEOUT SUBMITTALS

A. Operation and maintenance data.

1.6 FIELD CONDITIONS

A. Service Conditions: NEMA PB 1, usual service conditions, as follows:

1. Ambient temperatures within limits specified.
2. Altitude not exceeding 6600 feet (2000 m).

1.7 WARRANTY

A. Manufacturer's Warranty: Manufacturer agrees to repair or replace panelboards that fail in materials or workmanship within specified warranty period.

1. Panelboard Warranty Period: **18** months from date of Substantial Completion.

PART 2 - PRODUCTS

2.1 PANELBOARDS COMMON REQUIREMENTS

A. Fabricate and test panelboards according to IEEE 344 to withstand local seismic conditions.

B. Electrical Components, Devices, and Accessories: Listed and labeled as defined in NFPA 70, by a qualified testing agency, and marked for intended location and application.

C. Comply with NEMA PB 1.

D. Comply with NFPA 70.

E. Enclosures: Surface-mounted, dead-front cabinets.

1. Rated for environmental conditions at installed location.
   a. Indoor Dry and Clean Locations: NEMA 250, Type 12.

2. Height: 84 inches (2.13 m) maximum.
3. Front: Secured to box with concealed trim clamps. For surface-mounted fronts, match box dimensions; for flush-mounted fronts, overlap box. Trims shall cover all live parts and shall have no exposed hardware.
4. Hinged Front Cover: Entire front trim hinged to box and with standard door within hinged trim cover. Trims shall cover all live parts and shall have no exposed hardware.

F. Incoming Mains Location: **Bottom**.

G. Phase, Neutral, and Ground Buses: **Hard-drawn copper, 98 percent conductivity**.

H. Conductor Connectors: Suitable for use with conductor material and sizes.

1. Material: **Hard-drawn copper, 98 percent conductivity**.
2. Main and Neutral Lugs: **Compression** type, with a lug on the neutral bar for each pole in the panelboard.
3. Ground Lugs and Bus-Configured Terminators: **Compression** type, with a lug on the bar for each pole in the panelboard.
4. Feed-Through Lugs: **Compression** type, suitable for use with conductor material. Locate at opposite end of bus from incoming lugs or main device.
5. Subfeed (Double) Lugs: **Compression** type suitable for use with conductor material. Locate at same end of bus as incoming lugs or main device.

I. NRTL Label: Panelboards shall be labeled by an NRTL acceptable to authority having jurisdiction for use as service equipment with one or more main service disconnecting and overcurrent protective devices. Panelboards shall have meter enclosures, wiring, connections, and other provisions for utility metering. Coordinate with utility company for exact requirements.

J. Future Devices: Panelboards shall have mounting brackets, bus connections, filler plates, and necessary appurtenances required for future installation of devices.

K. Panelboard Short-Circuit Current Rating: Rated for series-connected system with integral or remote upstream overcurrent protective devices and labeled by an NRTL. Include label or manual with size and type of allowable upstream and branch devices listed and labeled by an NRTL for series-connected short-circuit rating.

L. Panelboard Short-Circuit Current Rating: Fully rated to interrupt symmetrical short-circuit current available at terminals. Assembly listed by an NRTL for 100 percent interrupting capacity.

2.2 PERFORMANCE REQUIREMENTS

A. Seismic Performance: Panelboards shall withstand the effects of earthquake motions determined according to ASCE/SEI 7.

1. The term "withstand" means "the unit will remain in place without separation of any parts from the device when subjected to the seismic forces specified."

B. Surge Suppression: Factory installed as an integral part of indicated panelboards, complying with UL 1449 SPD Type 1.

2.3 POWER PANELBOARDS

A. Manufacturers:

- Square D
- Eaton
- Siemens
- Engineer’s Approved Equal.

B. Panelboards: NEMA PB 1, distribution type.

C. Doors: Secured with vault-type latch with tumbler lock; keyed alike.

1. For doors more than 36 inches (914 mm) high, provide two latches, keyed alike.

D. Mains: Circuit breaker.

E. Branch Overcurrent Protective Devices for Circuit-Breaker Frame Sizes 125 A and Smaller: Plug-in circuit breakers.

F. Branch Overcurrent Protective Devices for Circuit-Breaker Frame Sizes Larger than 125 A: Bolt-on circuit.

G. Branch Overcurrent Protective Devices: Fused switches.

H. Contactors in Main Bus: NEMA ICS 2, Class A, electrically held, general-purpose controller, with same short-circuit interrupting rating as panelboard.

1. External Control-Power Source: 120-V branch circuit.

2.4 LIGHTING AND APPLIANCE BRANCH-CIRCUIT PANELBOARDS

A. Manufacturers:

- Square D
- Eaton
- Siemens
- Engineer's Approved Equal.

B. Panelboards: NEMA PB 1, lighting and appliance branch-circuit type.

C. Mains: Circuit breaker.

D. Branch Overcurrent Protective Devices: Plug-in circuit breakers, replaceable without disturbing adjacent units.

E. Doors: Concealed hinges; secured with flush latch with tumbler lock; keyed alike.

F. Column-Type Panelboards: Single row of overcurrent devices with narrow gutter extension and overhead junction box equipped with ground and neutral terminal buses.

2.5 DISCONNECTING AND OVERCURRENT PROTECTIVE DEVICES

A. Manufacturers:

- Square D
- Eaton
- Siemens
- Engineer's Approved Equal.

B. MCCB: Comply with UL 489, with series-connected rating to meet available fault currents.

1. Thermal-Magnetic Circuit Breakers:

   a. Inverse time-current element for low-level overloads.
   b. Instantaneous magnetic trip element for short circuits.
   c. Adjustable magnetic trip setting for circuit-breaker frame sizes 250 A and larger.

2. Adjustable Instantaneous-Trip Circuit Breakers: Magnetic trip element with front-mounted, field-adjustable trip setting.

3. Electronic Trip Circuit Breakers:

    a. RMS sensing.
    b. Field-replaceable rating plug or electronic trip.
    c. Digital display of settings, trip targets, and indicated metering displays.
    d. Multi-button keypad to access programmable functions and monitored data.
    e. Ten-event, trip-history log. Each trip event shall be recorded with type, phase, and magnitude of fault that caused the trip.
    f. Integral test jack for connection to portable test set or laptop computer.
    g. Field-Adjustable Settings:

        1) Instantaneous trip.
        2) Long- and short-time pickup levels.
        3) Long and short time adjustments.
        4) Ground-fault pickup level, time delay, and I squared T response.

4. Current-Limiting Circuit Breakers: Frame sizes 400 A and smaller; let-through ratings less than NEMA FU 1, RK-5.
5. GFCI Circuit Breakers: Single- and double-pole configurations with Class A ground-fault protection (6-mA trip).
6. GFEP Circuit Breakers: Class B ground-fault protection (30-mA trip).
7. Arc-Fault Circuit Interrupter Circuit Breakers: Comply with UL 1699; 120/240-V, single-pole configuration.
8. Subfeed Circuit Breakers: Vertically mounted.
9. MCCB Features and Accessories:

    a. Standard frame sizes, trip ratings, and number of poles.
    b. Breaker handle indicates tripped status.
    c. UL listed for reverse connection without restrictive line or load ratings.
    d. Lugs: Compression style, suitable for number, size, trip ratings, and conductor materials.
    e. Application Listing: Appropriate for application; Type SWD for switching fluorescent lighting loads; Type HID for feeding fluorescent and HID lighting circuits.
    f. Ground-Fault Protection: Integrally mounted relay and trip unit with adjustable pickup and time-delay settings, push-to-test feature, and ground-fault indicator.
    g. Shunt Trip: 120-V trip coil energized from separate circuit, set to trip at 55 percent of rated voltage.
    h. Handle Padlocking Device: Fixed attachment, for locking circuit-breaker handle in off position.
    i. Handle Clamp: Loose attachment, for holding circuit-breaker handle in on position.

C. Fused Switch: NEMA KS 1, Type HD; clips to accommodate specified fuses; lockable handle.

2.6 IDENTIFICATION

A. Panelboard Label: Manufacturer's name and trademark, voltage, amperage, number of phases, and number of poles shall be located on the interior of the panelboard door.

B. Breaker Labels: Faceplate shall list current rating, UL and IEC certification standards, and AIC rating.

C. Circuit Directory: Directory card inside panelboard door, mounted in transparent card holder.

2.7 ACCESSORY COMPONENTS AND FEATURES

A. Portable Test Set: For testing functions of solid-state trip devices without removing from panelboard. Include relay and meter test plugs suitable for testing panelboard meters and switchboard class relays.

PART 3 - EXECUTION

3.1 INSTALLATION

A. Comply with NECA 1.

B. Install panelboards and accessories according to NEMA PB 1.1.

C. Comply with mounting and anchoring requirements as required to accommodate local seismic conditions.

D. Mount top of trim 90 inches (2286 mm) above finished floor unless otherwise indicated.

E. Mount panelboard cabinet plumb and rigid without distortion of box.

F. Mount recessed panelboards with fronts uniformly flush with wall finish and mating with back box.

G. Install overcurrent protective devices and controllers not already factory installed.

1. Set field-adjustable, circuit-breaker trip ranges.

H. Make grounding connections and bond neutral for services and separately derived systems to ground. Make connections to grounding electrodes, separate grounds for isolated ground bars, and connections to separate ground bars.

I. Install filler plates in unused spaces.

J. Stub four 1-inch (27-EMT) empty conduits from panelboard into accessible ceiling space or space designated to be ceiling space in the future. Stub four 1-inch (27-EMT) empty conduits into raised floor space or below slab not on grade.

K. Arrange conductors in gutters into groups and bundle and wrap with wire ties.

3.2 IDENTIFICATION

A. Identify field-installed conductors, interconnecting wiring, and components; install warning signs complying with requirements in Section 260553 "Identification for Electrical Systems."

B. Create a directory to indicate installed circuit loads; incorporate Owner's final room designations. Obtain approval before installing. Handwritten directories are not acceptable. Install directory inside panelboard door.

C. Panelboard Nameplates: Label each panelboard with a nameplate complying with requirements for identification specified in Section 260553 "Identification for Electrical Systems."

D. Device Nameplates: Label each branch circuit device in power panelboards with a nameplate complying with requirements for identification specified in Section 260553 "Identification for Electrical Systems."

E. Install warning signs complying with requirements in Section 260553 "Identification for Electrical Systems" identifying source of remote circuit.

3.3 FIELD QUALITY CONTROL

A. Perform tests and inspections.

B. Acceptance Testing Preparation:

1. Test insulation resistance for each panelboard bus, component, connecting supply, feeder, and control circuit.
2. Test continuity of each circuit.

C. Tests and Inspections:

1. Perform each visual and mechanical inspection and electrical test for low-voltage air circuit breakers stated in NETA Acceptance Testing Specification. Certify compliance with test parameters.
2. Correct malfunctioning units on-site, where possible, and retest to demonstrate compliance; otherwise, replace with new units and retest.

D. Panelboards will be considered defective if they do not pass tests and inspections.

E. Prepare test and inspection reports, including a certified report that identifies panelboards included and that describes scanning results, with comparisons of the two scans. Include notation of deficiencies detected, remedial action taken, and observations after remedial action.

END OF SECTION 262416

SECTION 283111 - DIGITAL, ADDRESSABLE FIRE-ALARM SYSTEM

PART 1 - GENERAL

1.1 RELATED DOCUMENTS

A. Drawings and general provisions of the Contract, including General and Supplementary Conditions and Division 01 Specification Sections, apply to this Section.

1.2 SUMMARY

A. Section Includes:

1. Fire-alarm control unit.
2. Manual fire-alarm boxes.
3. System smoke detectors.
4. Heat detectors.
5. Notification appliances.
6. Magnetic door holders.
7. Remote annunciator.
8. Addressable interface device.
9. Digital alarm communicator transmitter.
10. Provide a complete fire alarm system engineered design including drawings, specifications, and calculations, required to provide a complete design suitable for a permit from the AHJ. Design must include signed, sealed documents suitable for the project location. This design supersedes all fire alarm concept layout drawings and specifications produced in this package.

1.3 DEFINITIONS

A. LED: Light-emitting diode.

B. NICET: National Institute for Certification in Engineering Technologies.

1.4 SYSTEM DESCRIPTION

A. Noncoded, UL-certified addressable system, with multiplexed signal transmission, dedicated to fire-alarm service only.

1.5 PERFORMANCE REQUIREMENTS

A. Seismic Performance: Fire-alarm control unit and raceways shall withstand the effects of earthquake motions determined according to SEI/ASCE 7.

1. The term "withstand" means "the unit will remain in place without separation of any parts from the device when subjected to the seismic forces specified."

1.6 ACTION SUBMITTALS

A. Product Data: For each type of product indicated.

B. Shop Drawings: For fire-alarm system. Include plans, elevations, sections, details, and attachments to other work.

1. Comply with recommendations in the "Documentation" Section of the "Fundamentals of Fire Alarm Systems" Chapter in NFPA 72.
2. Include voltage drop calculations for notification appliance circuits.
3. Include battery-size calculations.
4. Include performance parameters and installation details for each detector, verifying that each detector is listed for complete range of air velocity, temperature, and humidity possible when air-handling system is operating.
5. Include plans, sections, and elevations of heating, ventilating, and air-conditioning ducts, drawn to scale and coordinating installation of duct smoke detectors and access to them. Show critical dimensions that relate to placement and support of sampling tubes, detector housing, and remote status and alarm indicators. Locate detectors according to manufacturer's written recommendations.
6. Include voice/alarm signaling-service equipment rack or console layout, grounding schematic, amplifier power calculation, and single-line connection diagram.
7. Include floor plans to indicate final outlet locations showing address of each addressable device. Show size and route of cable and conduits.

C. General Submittal Requirements:

1. Submittals shall be approved by authorities having jurisdiction prior to submitting them to Engineer.
2. Shop Drawings shall be prepared by persons with the following qualifications:

a. Trained and certified by manufacturer in fire-alarm system design.
b. NICET-certified fire-alarm technician, Level III minimum.
c. Licensed or certified by authorities having jurisdiction.

D. For smoke and heat detectors indicated to comply with performance requirements and design criteria, including analysis data signed and sealed by the qualified professional engineer responsible for their preparation.

1. Drawings showing the location of each smoke and heat detector, ratings of each, and installation details as needed to comply with listing conditions of the detector.
2. Design Calculations: Calculate requirements for selecting the spacing and sensitivity of detection, complying with NFPA 72.

1.7 INFORMATIONAL SUBMITTALS

A. Qualification Data: For qualified Installer.

B. Seismic Qualification Certificates: For fire-alarm control unit, accessories, and components, from manufacturer.

1. Basis for Certification: Indicate whether withstand certification is based on actual test of assembled components or on calculation.

2. Dimensioned Outline Drawings of Equipment Unit: Identify center of gravity and locate and describe mounting and anchorage provisions.
3. Detailed description of equipment anchorage devices on which the certification is based and their installation requirements.

C. Field quality-control reports.

1.8 CLOSEOUT SUBMITTALS

A. Operation and Maintenance Data: For fire-alarm systems and components to include in operation and maintenance manuals. In addition to items specified in Section 017823 "Operation and Maintenance Data," include the following:

1. Comply with the "Records" Section of the "Inspection, Testing and Maintenance" Chapter in NFPA 72.
2. Provide "Record of Completion Documents" according to NFPA 72 article "Permanent Records" in the "Records" Section of the "Inspection, Testing and Maintenance" Chapter.
3. Record copy of site-specific software.
4. Provide "Maintenance, Inspection and Testing Records" according to NFPA 72 article of the same name and include the following:

   a. Frequency of testing of installed components.
   b. Frequency of inspection of installed components.
   c. Requirements and recommendations related to results of maintenance.
   d. Manufacturer's user training manuals.

5. Manufacturer's required maintenance related to system warranty requirements.
6. Abbreviated operating instructions for mounting at fire-alarm control unit.

B. Software and Firmware Operational Documentation:

1. Software operating and upgrade manuals.
2. Program Software Backup: On magnetic media or compact disk, complete with data files.
3. Device address list.
4. Printout of software application and graphic screens.

1.9 QUALITY ASSURANCE

A. Installer Qualifications: Personnel shall be trained and certified by manufacturer for installation of units required for this Project.

B. Installer Qualifications: Installation shall be by personnel certified by NICET as fire-alarm Level II technician.

C. Source Limitations for Fire-Alarm System and Components: Obtain fire-alarm system from single source from single manufacturer. Components shall be compatible with, and operate as, an extension of existing system.

D. Electrical Components, Devices, and Accessories: Listed and labeled as defined in NFPA 70, by a qualified testing agency, and marked for intended location and application.

E. NFPA Certification: Obtain certification according to NFPA 72 by a UL-listed alarm company.

1.10 SOFTWARE SERVICE AGREEMENT

A. Comply with UL 864.

B. Technical Support: Beginning with Substantial Completion, provide software support for one year.

C. Upgrade Service: Update software to latest version at Project completion. Install and program software upgrades that become available within one year from date of Substantial Completion. Upgrading software shall include operating system. Upgrade shall include new or revised licenses for use of software.

1. Provide 30 days' notice to Owner to allow scheduling and access to system and to allow Owner to upgrade computer equipment if necessary.

PART 2 - PRODUCTS

2.1 MANUFACTURERS

A. Manufacturers: Subject to compliance with requirements, available manufacturers offering products that may be incorporated into the Work include, but are not limited to, the following:

1. Faraday; Siemens Building Technologies, Inc.
2. Federal Signal Corporation.
3. Fire Control Instruments, Inc.; a Honeywell company.
4. Fire Lite Alarms; a Honeywell company.
5. GAMEWELL; a Honeywell company.
6. Gentex Corporation.
7. NOTIFIER; a Honeywell company.
8. Siemens Building Technologies, Inc.; Fire Safety Division.
9. Silent Knight; a Honeywell company.
10. SimplexGrinnell LP; a Tyco International company.

2.2 SYSTEMS OPERATIONAL DESCRIPTION

A. Fire-alarm signal initiation shall be by one or more of the following devices and systems where indicated on drawings:

1. Manual stations.
2. Heat detectors.
3. Flame detectors.
4. Smoke detectors.
5. Duct smoke detectors.
6. Verified automatic alarm operation of smoke detectors.
7. Automatic sprinkler system water flow.
8. Heat detectors in elevator shaft and pit.
9. Fire-extinguishing system operation.
10. Fire standpipe system.

B. Fire-alarm signal shall initiate the following actions where indicated on drawings:

1. Continuously operate alarm notification appliances.

2. Identify alarm at fire-alarm control unit and remote annunciators.
3. Transmit an alarm signal to the remote alarm receiving station.
4. Unlock electric door locks in designated egress paths.
5. Release fire and smoke doors held open by magnetic door holders.
6. Activate voice/alarm communication system.
7. Switch heating, ventilating, and air-conditioning equipment controls to fire-alarm mode.
8. Activate smoke-control system (smoke management) at firefighter smoke-control system panel where indicated on drawings.
9. Activate stairwell and elevator-shaft pressurization systems where indicated on drawings.
10. Close smoke dampers in air ducts of designated air-conditioning duct systems.
11. Recall elevators to primary or alternate recall floors.
12. Activate emergency lighting control.
13. Activate emergency shutoffs for gas and fuel supplies.
14. Record events in the system memory.
15. Record events by the system printer.

C. Supervisory signal initiation shall be by one or more of the following devices and actions:

1. Valve supervisory switch.
2. Low-air-pressure switch of a dry-pipe sprinkler system.
3. Elevator shunt-trip supervision.

D. System trouble signal initiation shall be by one or more of the following devices and actions where indicated on drawings:

1. Open circuits, shorts, and grounds in designated circuits.
2. Opening, tampering with, or removing alarm-initiating and supervisory signal-initiating devices.
3. Loss of primary power at fire-alarm control unit.
4. Ground or a single break in fire-alarm control unit internal circuits.
5. Abnormal ac voltage at fire-alarm control unit.
6. Break in standby battery circuitry.
7. Failure of battery charging.
8. Abnormal position of any switch at fire-alarm control unit or annunciator.
9. Fire-pump power failure, including a dead-phase or phase-reversal condition.
10. Low-air-pressure switch operation on a dry-pipe or preaction sprinkler system.

E. System Trouble and Supervisory Signal Actions: Initiate notification appliance and annunciate at fire-alarm control unit and remote annunciators. Record the event on system printer.

2.3 FIRE-ALARM CONTROL UNIT

A. General Requirements for Fire-Alarm Control Unit:

1. Field-programmable, microprocessor-based, modular, power-limited design with electronic modules, complying with UL 864 and listed and labeled by an NRTL.

   a. System software and programs shall be held in flash electrically erasable programmable read-only memory (EEPROM), retaining the information through failure of primary and secondary power supplies.
   b. Include a real-time clock for time annotation of events on the event recorder and printer.

2. Addressable initiation devices that communicate device identity and status.

a. Smoke sensors shall additionally communicate sensitivity setting.
b. Temperature sensors shall additionally test for and communicate the sensitivity range of the device.

3. Addressable control circuits for operation of mechanical equipment.

B. Alphanumeric Display and System Controls: Arranged for interface between human operator at fire-alarm control unit and addressable system components including annunciation and supervision. Display alarm, supervisory, and component status messages and the programming and control menu.

1. Annunciator and Display: Liquid-crystal type, 3 line(s) of 80 characters, minimum.
2. Keypad: Arranged to permit entry and execution of programming, display, and control commands.

C. Circuits:

1. Initiating Device, Notification Appliance, and Signaling Line Circuits: NFPA 72, Class A.

a. Initiating Device Circuits: Style D.
b. Notification Appliance Circuits: Style Z.
c. Signaling Line Circuits: Style 6.
d. Install no more than 50 addressable devices on each signaling line circuit.

2. Initiating Device, Notification Appliance, and Signaling Line Circuits: NFPA 72, Class B.

a. Initiating Device Circuits: Style A.
b. Notification Appliance Circuits: Style W.
c. Signaling Line Circuits: Style 4.
d. Install no more than 50 addressable devices on each signaling line circuit.

3. Serial Interfaces: Two RS-232 ports for printers.

D. Stairwell Pressurization where indicated on drawings: Provide an output signal using an addressable relay to start the stairwell pressurization system. Signal shall remain on until alarm conditions are cleared and fire-alarm system is reset. Signal shall not stop in response to alarm acknowledge or signal silence commands.

1. Pressurization starts when any alarm is received at fire-alarm control unit.
2. Alarm signals from smoke detectors at pressurization air supplies have a higher priority than other alarm signals that start the system.

E. Smoke-Alarm Verification:

1. Initiate audible and visible indication of an "alarm-verification" signal at fire-alarm control unit.
2. Activate an NRTL-listed and -approved "alarm-verification" sequence at fire-alarm control unit and detector.
3. Record events by the system printer.
4. Sound general alarm if the alarm is verified.
5. Cancel fire-alarm control unit indication and system reset if the alarm is not verified.

F. Elevator Recall:

1. Smoke detectors at the following locations shall initiate automatic elevator recall.

a. Elevator lobby detectors except the lobby detector on the designated floor.
b. Smoke detector in elevator machine room.
c. Smoke detectors in elevator hoistway.

2. Elevator lobby detectors located on the designated recall floors shall be programmed to move the cars to the alternate recall floor.
3. Water-flow alarm connected to sprinkler in an elevator shaft and elevator machine room shall shut down elevators associated with the location without time delay.

a. Water-flow switch associated with the sprinkler in the elevator pit may have a delay to allow elevators to move to the designated floor.

G. Door Controls where indicated on drawings: Door hold-open devices that are controlled by smoke detectors at doors in smoke barrier walls shall be connected to fire-alarm system.

H. Transmission to Remote Alarm Receiving Station: Automatically transmit alarm, supervisory, and trouble signals to a remote alarm station.

I. Printout of Events: On receipt of signal, print alarm, supervisory, and trouble events. Identify zone, device, and function. Include type of signal (alarm, supervisory, or trouble) and date and time of occurrence. Differentiate alarm signals from all other printed indications. Also print system reset event, including same information for device, location, date, and time. Commands initiate the printing of a list of existing alarm, supervisory, and trouble conditions in the system and a historical log of events.

J. Primary Power: 24-V dc obtained from 120-V ac service and a power-supply module. Initiating devices, notification appliances, signaling lines, trouble signals, supervisory and digital alarm communicator transmitters shall be powered by 24-V dc source.

1. Alarm current draw of entire fire-alarm system shall not exceed 80 percent of the power-supply module rating.

K. Secondary Power: 24-V dc supply system with batteries, automatic battery charger, and automatic transfer switch.

1. Batteries: Sealed lead calcium.

L. Instructions: Computer printout or typewritten instruction card mounted behind a plastic or glass cover in a stainless-steel or aluminum frame. Include interpretation and describe appropriate response for displays and signals. Briefly describe the functional operation of the system under normal, alarm, and trouble conditions.

2.4 MANUAL FIRE-ALARM BOXES

A. General Requirements for Manual Fire-Alarm Boxes: Comply with UL 38. Boxes shall be finished in red with molded, raised-letter operating instructions in contrasting color; shall show visible indication of operation; and shall be mounted on recessed outlet box. If indicated as surface mounted, provide manufacturer's surface back box.

1. Single-action mechanism, breaking-glass or plastic-rod type; with integral addressable module arranged to communicate manual-station status (normal, alarm, or trouble) to fire-alarm control unit.
2. Station Reset: Key- or wrench-operated switch.

3. Indoor Protective Shield where indicated on drawings: Factory-fabricated clear plastic enclosure hinged at the top to permit lifting for access to initiate an alarm. Lifting the cover actuates an integral battery-powered audible horn intended to discourage false-alarm operation.
4. Weatherproof Protective Shield: Factory-fabricated clear plastic enclosure hinged at the top to permit lifting for access to initiate an alarm.

2.5 SYSTEM SMOKE DETECTORS

A. General Requirements for System Smoke Detectors:

1. Comply with UL 268; operating at 24-V dc, nominal.
2. Detectors shall be four-wire type.
3. Integral Addressable Module: Arranged to communicate detector status (normal, alarm, or trouble) to fire-alarm control unit.
4. Base Mounting: Detector and associated electronic components shall be mounted in a twist-lock module that connects to a fixed base. Provide terminals in the fixed base for connection to building wiring.
5. Self-Restoring: Detectors do not require resetting or readjustment after actuation to restore them to normal operation.
6. Integral Visual-Indicating Light: LED type indicating detector has operated and power-on status.

B. Photoelectric Smoke Detectors:

1. Detector address shall be accessible from fire-alarm control unit and shall be able to identify the detector's location within the system and its sensitivity setting.
2. An operator at fire-alarm control unit, having the designated access level, shall be able to manually access the following for each detector:

    a. Primary status.
    b. Device type.
    c. Present average value.
    d. Present sensitivity selected.
    e. Sensor range (normal, dirty, etc.).

C. Ionization Smoke Detector (where indicated on drawings):

1. Detector address shall be accessible from fire-alarm control unit and shall be able to identify the detector's location within the system and its sensitivity setting.
2. An operator at fire-alarm control unit, having the designated access level, shall be able to manually access the following for each detector:

    a. Primary status.
    b. Device type.
    c. Present average value.
    d. Present sensitivity selected.
    e. Sensor range (normal, dirty, etc.).

D. Duct Smoke Detectors: Photoelectric type complying with UL 268A.

1. Detector address shall be accessible from fire-alarm control unit and shall be able to identify the detector's location within the system and its sensitivity setting.

2. An operator at fire-alarm control unit, having the designated access level, shall be able to manually access the following for each detector:

    a. Primary status.
    b. Device type.
    c. Present average value.
    d. Present sensitivity selected.
    e. Sensor range (normal, dirty, etc.).

3. Weatherproof Duct Housing Enclosure: NEMA 250, Type 4X; NRTL listed for use with the supplied detector.
4. Each sensor shall have multiple levels of detection sensitivity.
5. Sampling Tubes: Design and dimensions as recommended by manufacturer for specific duct size, air velocity, and installation conditions where applied.
6. Relay Fan Shutdown: Rated to interrupt fan motor-control circuit.

2.6 HEAT DETECTORS

A. General Requirements for Heat Detectors: Comply with UL 521.

B. Heat Detector, Combination Type: Actuated by either a fixed temperature of 135 deg F or a rate of rise that exceeds 15 deg F per minute unless otherwise indicated.

    1. Mounting: Twist-lock base interchangeable with smoke-detector bases.
    2. Integral Addressable Module: Arranged to communicate detector status (normal, alarm, or trouble) to fire-alarm control unit.

C. Heat Detector, Fixed-Temperature Type: Actuated by temperature that exceeds a fixed temperature of 190 deg F.

    1. Mounting: Twist-lock base interchangeable with smoke-detector bases.
    2. Integral Addressable Module: Arranged to communicate detector status (normal, alarm, or trouble) to fire-alarm control unit.

2.7 NOTIFICATION APPLIANCES

A. General Requirements for Notification Appliances: Connected to notification appliance signal circuits, zoned as indicated, equipped for mounting as indicated and with screw terminals for system connections.

    1. Combination Devices: Factory-integrated audible and visible devices in a single-mounting assembly, equipped for mounting as indicated and with screw terminals for system connections.

B. Horns: Electric-vibrating-polarized type, 24-V dc; with provision for housing the operating mechanism behind a grille. Comply with UL 464. Horns shall produce a sound-pressure level of 90 dBA, measured 10 feet from the horn, using the coded signal prescribed in UL 464 test protocol.

C. Visible Notification Appliances: Xenon strobe lights comply with UL 1971, with clear or nominal white polycarbonate lens mounted on an aluminum faceplate. The word "FIRE" is engraved in minimum 1-inch- high letters on the lens.

1. Rated Light Output:

   a. 15, 30, 75, 110 or 177 cd as indicated on drawings.

2. Mounting: Wall mounted unless otherwise indicated.
3. For units with guards to prevent physical damage, light output ratings shall be determined with guards in place.
4. Flashing shall be in a temporal pattern, synchronized with other units.
5. Strobe Leads: Factory connected to screw terminals.
6. Mounting Faceplate: Factory finished, red.

D. Voice/Tone Notification Appliances:

1. Appliances shall comply with UL 1480 and shall be listed and labeled by an NRTL.
2. High-Range Units: Rated 2 to 15 W.
3. Low-Range Units: Rated 1 to 2 W.
4. Mounting: Flush or surface mounted and bidirectional as indicated on drawings.
5. Matching Transformers: Tap range matched to acoustical environment of speaker location.

2.8 MAGNETIC DOOR HOLDERS

A. Description: Units are equipped for wall or floor mounting as indicated and are complete with matching doorplate.

1. Electromagnet: Requires no more than 3 W to develop 25-lbf holding force.
2. Wall-Mounted Units: Flush mounted unless otherwise indicated.
3. Rating: 24-V ac or dc.

B. Material and Finish: Match door hardware.

2.9 REMOTE ANNUNCIATOR (where indicated on drawings)

A. Description: Annunciator functions shall match those of fire-alarm control unit for alarm, supervisory, and trouble indications. Manual switching functions shall match those of fire-alarm control unit, including acknowledging, silencing, resetting, and testing.

1. Mounting: Flush cabinet, NEMA 250, Type 1.

B. Display Type and Functional Performance: Alphanumeric display and LED indicating lights shall match those of fire-alarm control unit. Provide controls to acknowledge, silence, reset, and test functions for alarm, supervisory, and trouble signals.

2.10 ADDRESSABLE INTERFACE DEVICE

A. Description: Microelectronic monitor module, NRTL listed for use in providing a system address for alarm-initiating devices for wired applications with normally open contacts.

B. Integral Relay: Capable of providing a direct signal to elevator controller to initiate elevator recall and to initiate circuit-breaker shunt trip for power shutdown.

2.11 DIGITAL ALARM COMMUNICATOR TRANSMITTER

A. Digital alarm communicator transmitter shall be acceptable to the remote central station and shall comply with UL 632 and be listed and labeled by an NRTL.

B. Functional Performance: Unit shall receive an alarm, supervisory, or trouble signal from fire-alarm control unit and automatically capture two telephone line(s) and dial a preset number for a remote central station. When contact is made with central station(s), signals shall be transmitted. If service on either line is interrupted for longer than 45 seconds, transmitter shall initiate a local trouble signal and transmit the signal indicating loss of telephone line to the remote alarm receiving station over the remaining line. Transmitter shall automatically report telephone service restoration to the central station. If service is lost on both telephone lines, transmitter shall initiate the local trouble signal.

C. Local functions and display at the digital alarm communicator transmitter shall include the following:

1. Verification that both telephone lines are available.
2. Programming device.
3. LED display.
4. Manual test report function and manual transmission clear indication.
5. Communications failure with the central station or fire-alarm control unit.

D. Digital data transmission shall include the following:

1. Address of the alarm-initiating device.
2. Loss of ac supply or loss of power.
3. Low battery.
4. Abnormal test signal.

E. Self-Test: Conducted automatically every 24 hours with report transmitted to central station.

2.12 DEVICE GUARDS where indicated on drawings

A. Description: Welded wire mesh of size and shape for the manual station, smoke detector, gong, or other device requiring protection.

1. Factory fabricated and furnished by manufacturer of device.
2. Finish: Paint of color to match the protected device.

PART 3 - EXECUTION

3.1 EQUIPMENT INSTALLATION (where indicated on drawings)

A. Comply with NFPA 72 for installation of fire-alarm equipment.

B. Install wall-mounted equipment, with tops of cabinets not more than 72 inches above the finished floor.

1. Comply with requirements for seismic-restraint devices specified in Section 260548 "Vibration and Seismic Controls for Electrical Systems."

C. Smoke- or Heat-Detector Spacing:

1. Comply with NFPA 72, "Smoke-Sensing Fire Detectors" Section in the "Initiating Devices" Chapter, for smoke-detector spacing.
2. Comply with NFPA 72, "Heat-Sensing Fire Detectors" Section in the "Initiating Devices" Chapter, for heat-detector spacing.
3. Smooth ceiling spacing shall not exceed 30 feet.
4. Spacing of detectors for irregular areas, for irregular ceiling construction, and for high ceiling areas shall be determined according to Appendix A in NFPA 72.
5. HVAC: Locate detectors not closer than 3 feet from air-supply diffuser or return-air opening.
6. Lighting Fixtures: Locate detectors not closer than 12 inches from any part of a lighting fixture.

D. Duct Smoke Detectors: Comply with NFPA 72 and NFPA 90A. Provide ductwork smoke detector and sampling tubes to mechanical subcontractor in room of ductwork smoke detector location. Device installation by mechanical subcontractor. Wiring connections and testing and commissioning by electrical subcontractor. Furnish sampling tubes so they extend the full width of duct.

E. Heat Detectors in Elevator Shafts: Coordinate temperature rating and location with sprinkler rating and location.

F. Remote Status and Alarm Indicators: Install near each smoke detector and each sprinkler water-flow switch and valve-tamper switch that is not readily visible from normal viewing position.

G. Audible Alarm-Indicating Devices: Install not less than 6 inches below the ceiling. Install bells and horns on flush-mounted back boxes with the device-operating mechanism concealed behind a grille.

H. Visible Alarm-Indicating Devices: Install adjacent to each alarm bell or alarm horn and at least 6 inches below the ceiling.

I. Device Location-Indicating Lights: Locate in public space near the device they monitor.

J. Fire-Alarm Control Unit: Surface mounted, with tops of cabinets not more than 72 inches above the finished floor.

K. Annunciator: Install with top of panel not more than 72 inches above the finished floor.

L. Antenna for Radio Alarm Transmitter: Mount to building structure where indicated. Use mounting arrangement and substrate connection that will resist 100-mph wind load with a gust factor of 1.3 without damage.

3.2 CONNECTIONS (where indicated on drawings)

A. For fire-protection systems related to doors in fire-rated walls and partitions and to doors in smoke partitions, comply with requirements in Section 087100 "Door Hardware." Connect hardware and devices to fire-alarm system.

1. Verify that hardware and devices are NRTL listed for use with fire-alarm system in this Section before making connections.

B. Make addressable connections with a supervised interface device to the following devices and systems where indicated on the drawings. Install the interface device less than 3 feet from the device controlled. Make an addressable confirmation connection when such feedback is available at the device or system being controlled.

1. Alarm-initiating connection to smoke-control system (smoke management) at firefighter smoke-control system panel.
2. Alarm-initiating connection to stairwell and elevator-shaft pressurization systems.
3. Smoke dampers in air ducts of designated air-conditioning duct systems.
4. Alarm-initiating connection to elevator recall system and components.
5. Alarm-initiating connection to activate emergency lighting control.
6. Alarm-initiating connection to activate emergency shutoffs for gas and fuel supplies.
7. Supervisory connections at valve supervisory switches.
8. Supervisory connections at low-air-pressure switch of each dry-pipe sprinkler system.
9. Supervisory connections at elevator shunt trip breaker.
10. Supervisory connections at fire-pump power failure including a dead-phase or phase-reversal condition.
11. Supervisory connections at fire-pump engine control panel.

3.3 IDENTIFICATION

A. Identify system components, wiring, cabling, and terminals. Comply with requirements for identification specified in Section 260553 "Identification for Electrical Systems."

B. Install framed instructions in a location visible from fire-alarm control unit.

3.4 GROUNDING

A. Ground fire-alarm control unit and associated circuits; comply with IEEE 1100. Install a ground wire from main service ground to fire-alarm control unit.

3.5 FIELD QUALITY CONTROL

A. Field tests shall be witnessed by authorities having jurisdiction.

B. Manufacturer's Field Service: Engage a factory-authorized service representative to inspect, test, and adjust components, assemblies, and equipment installations, including connections.

C. Tests and Inspections:

1. Visual Inspection: Conduct visual inspection prior to testing.

   a. Inspection shall be based on completed Record Drawings and system documentation that is required by NFPA 72 in its "Completion Documents, Preparation" Table in the "Documentation" Section of the "Fundamentals of Fire Alarm Systems" Chapter.
   b. Comply with "Visual Inspection Frequencies" Table in the "Inspection" Section of the "Inspection, Testing and Maintenance" Chapter in NFPA 72; retain the "Initial/Reacceptance" column and list only the installed components.

2. System Testing: Comply with "Test Methods" Table in the "Testing" Section of the "Inspection, Testing and Maintenance" Chapter in NFPA 72.

3. Test audible appliances for the public operating mode according to manufacturer's written instructions. Perform the test using a portable sound-level meter complying with Type 2 requirements in ANSI S1.4.
4. Test audible appliances for the private operating mode according to manufacturer's written instructions.
5. Test visible appliances for the public operating mode according to manufacturer's written instructions.
6. Factory-authorized service representative shall prepare the "Fire Alarm System Record of Completion" in the "Documentation" Section of the "Fundamentals of Fire Alarm Systems" Chapter in NFPA 72 and the "Inspection and Testing Form" in the "Records" Section of the "Inspection, Testing and Maintenance" Chapter in NFPA 72.

D. Reacceptance Testing: Perform reacceptance testing to verify the proper operation of added or replaced devices and appliances.

E. Fire-alarm system will be considered defective if it does not pass tests and inspections.

F. Prepare test and inspection reports.

3.6 DEMONSTRATION

A. Train Owner's maintenance personnel to adjust, operate, and maintain fire-alarm system.

END OF SECTION 283111

ATTACHMENTS

UNITED CONSULTING

REPORT

For Engineering Strategies, Inc.

Geotechnical Exploration
New Maintenance Building
Rockdale County Water Treatment Plant
3090 Gees Mill Road Northeast
Rockdale County, Conyers, Georgia
Project No.: ENGSI-18-GA-02751-01

625 Holcomb Bridge Road, Norcross, GA 30071 • 770-209-0029 • unitedconsulting.com

UNITED CONSULTING

November 5, 2018

Mr. Pedro M. Rossello, PE
President
Engineering Strategies, Inc.
3855 Shallowford Road
Suite 525
Marietta, Georgia 30062

Via Email: prossello@esi-ga.com

RE: Report of Geotechnical Exploration
New Maintenance Building
Rockdale County Water Treatment Plant
3090 Gees Mill Road Northeast
Conyers, Rockdale County, Georgia
Project No.: ENGSI-18-GA-02751-01

Dear Mr. Rossello:

United Consulting is pleased to submit this report of our Geotechnical Exploration for the above-referenced project. We appreciate the opportunity to assist you with this project and look forward to our continued participation. Please contact us if you have any questions or if we can be of further assistance.

Sincerely,

UNITED CONSULTING

GEORGIA REGISTERED No. 20383 PROFESSIONAL ENGINEER MICHAEL A. KEMP

Michael A. Kemp, P.E.
Geotechnical Engineer

Chris L. Roberds, P.G.
Senior Executive Vice President

SRT/MAK/CLR/rg

unc-sps/894/ENGSI-18-GA-02751-01/Geotechnical Documents/ENGSI-18-GA-02751-01 - Geo.docx

TABLE OF CONTENTS

1.0 EXECUTIVE SUMMARY 4
2.0 PROJECT INFORMATION 5
3.0 PURPOSE 6
4.0 SCOPE 7
5.0 SUBSURFACE CONDITIONS 8
6.0 DISCUSSION AND RECOMMENDATIONS 9
6.1 Existing Fill Evaluation 9
6.2 Site Preparation 9
6.3 Caving Considerations 10
6.4 Difficult Excavation 10
6.5 Earthwork 11
6.6 Groundwater Considerations 11
6.7 Slopes 11
6.8 Foundation Design and Construction 12
6.9 Ground Floor Slabs 13
6.10 Retaining Walls 13
6.11 Fill Placement 14
6.12 Seismic Site Class 14
7.0 LIMITATIONS 15

APPENDIX

General Notes /Narrative of Drilling Operations
Figure 1– Boring Location Plan
Exploration Procedures
SPT Boring Logs (8)
Typical Benching Detail
Typical Retaining Wall Drainage Detail

1.0 EXECUTIVE SUMMARY

United Consulting has completed a Geotechnical Exploration on the New Maintenance Building site at the Rockdale County Water Treatment Plant located at 3090 Gees Mill Road Northeast in Conyers, Rockdale County, Georgia. Please refer to the text of the report for a more detailed discussion of the items summarized below.

1. Borings B-1 and B-1A encountered approximately 8 feet of fill soils, and borings B-2, B-2A, B-3, and B-5 encountered approximately 3 to 4.5 feet of fill soils. The fill generally appeared to be clean and moderately to well compacted. However, we recommend that the quality of the fill be thoroughly evaluated at the time of construction and funds be allocated for the removal of any low consistency fill soils, debris or other unsuitable materials that may be encountered.

2. Partially Weathered Rock (PWR) was encountered in all the borings starting at depths ranging from 3 to 13 feet. Auger refusal was encountered in all the borings at depths ranging from 4.5 to 15 feet. Significant difficult excavation conditions (ripping and blasting in mass excavation and blasting for trench/utility excavations) associated with PWR or rock should be expected for excavations at this site. United Consulting recommends the construction budget include funds for difficult excavation.

3. Groundwater was not encountered in the borings at the time of drilling. Shallow groundwater is not expected to impact construction; however, the contractor should be prepared to control groundwater or perched water, as needed.

4. Provided that the site is prepared as recommendations, it is our opinion that the proposed maintenance building can be supported on conventional shallow foundations such as spread footings and/or continuous strip footings. An allowable soil bearing pressure of up to 3,000 pounds per square foot (psf) can be used for the design of conventional shallow foundations.

5. United Consulting utilized available geotechnical information (N-Values) and our experience with similar soil conditions to provide a seismic site classification of “Site Class C” for the site.

2.0 PROJECT INFORMATION

The project site is located at the Rockdale County Water Treatment Plant located at 3090 Gees Mill Road Northeast in Conyers, Rockdale County, Georgia. At the time of our exploration, the Project Site was a vacant gravel and grass covered area located in the southern portion of the Rockdale County Water Treatment Plant. The project site contained a gravel road running north-south across the central portion of the Site. The project site area is surrounded structures associated with the water treatment plan, and is bounded to the north by a concrete driveway, to the east by generator with a concrete pad and gravel parking lot, to the south by wooded areas with some cleared paths, and to the west by vacant, grass covered areas and a detention pond. The larger treatment plant area was surrounded by wooded areas. The general location of the project site is shown on the attached Boring Location Plan (Figure 1).

A topographic site plans indicated that the site was gently sloping down from the southeast areas toward the northwest. The highest elevation near 770 was in the southeastern portion of the site and the lowest elevation of about 762 was in the northwestern portion of the site. The Finished Floor Elevation (FFE) of the proposed maintenance building is at elevation 766. Based on this information, we anticipate maximum cuts and fills on the order of 5 feet or so will be required.

We understand that a 160’ x 70’ x 17’ high (minimum) Pre-Engineered Steel Building will be constructed. Structural loads were not provided, but based on previous experience we estimate maximum loads on columns will not exceed about 120 kips.

If the actual loads and site grading information vary significantly from the above anticipated values, United Consulting must be contacted to determine if our recommendations should be re-evaluated and/or revised.

3.0 PURPOSE

The purpose of this Geotechnical Exploration was to assess the general type and condition of the subsurface materials at the Project Site and to provide recommendations regarding the design and construction of the building foundations, grading, earthwork, quality control and other geotechnical related issues, deemed pertinent to this project.

4.0 SCOPE

The scope of our geotechnical exploration included the following items:

1. A visual reconnaissance of the site from a geotechnical standpoint;
2. Drilling five (5) SPT borings and three (3) offset borings;
3. Visual evaluation of the soil samples obtained during our field testing program for further identification and classification;
4. Analyzing the existing soil conditions with respect to the proposed construction; and
5. Preparing this report to document the results of our field-testing program, engineering analysis, and to provide our findings and general recommendations.

5.0 SUBSURFACE CONDITIONS

Initially, the borings encountered a surficial layer of gravel, grass, or topsoil. Borings B-1 and B-1A encountered approximately 8 feet of fill soils, and borings B-2, B-2A, B-3, and B-5 encountered approximately 3 to 4.5 feet of fill soils. The fill soil consisted of firm to stiff silt with varying amounts of sand, mica, and clay and traces of rock fragments, root hair, and wood pieces. Boring B-3 also encountered a surficial layer of medium dense fill sand with some rock fragments and traces of silt and clay. Standard Penetration Test resistances (N-values) within the fill silts ranged from 6 bpf to 10 bpf, and the fill sand had an N-value of 21 bpf.

Below the fill soils in the aforementioned borings and surficial materials in the remaining borings, typical residual soils of the Piedmont Physiographic Province of Georgia were encountered. The residual soils generally consisted of medium dense to dense sand with varying amounts of silt, rock fragments, and mica. N-values within the residual sand soils ranged from 14 to 43 bpf.

Partially Weathered Rock (PWR) was encountered in all the borings starting at depths ranging from 3 to 13 feet. PWR is a term for residuum that can be penetrated with a soil drilling auger but has N-values in excess of 100 bpf. The PWR encountered was classified as very dense sand with varying amounts of silt and rock fragments and traces of mica.

Auger refusal was encountered in all the borings at depths ranging from 4.5 to 15 feet. Auger refusal is the depth that the boring cannot be advanced with a soil drilling auger. Auger refusal below residual soils generally represents a seam of dense PWR, boulders, or top of massive bedrock.

Groundwater was not encountered in the borings at the time of drilling. Groundwater levels should also be anticipated to fluctuate with the change of seasons, during periods of very low or high precipitation, or due change in floodplain or watershed upstream of the site.

For a more detailed description of the subsurface conditions encountered, please refer to the boring logs in The Appendix.

6.0 DISCUSSION AND RECOMMENDATIONS

The following recommendations are based on our understanding of the proposed construction, the data obtained in the soil test borings, a site reconnaissance, and our experience with subsurface conditions similar to those encountered at the project site.

We recommend that United Consulting be provided with updated documents early in the preparation of final construction drawings to determine if our recommendations are still valid or should be re-evaluated and revised.

6.1 Existing Fill Evaluation

Borings B-1 and B-1A encountered approximately 8 feet of fill soils, and borings B-2, B-2A, B-3, and B-5 encountered approximately 3 to 4.5 feet of fill soils. In general, the fill encountered appeared to be clean and moderately to well compacted.

As with any undocumented fill, it is possible that poor quality fill, trash pits, debris or other deleterious materials could be present intermediate of the boring locations. We recommend that areas of existing fill be thoroughly evaluated during construction by proofrolling. Further, we suggest that funds be allocated for the remediation of isolated areas of poor quality fill or debris that may be encountered during construction.

6.2 Site Preparation

Historically, the project site contained an apparent gravel parking lot, which was subsequently abandoned. As such, the existing gravel should be removed from the areas of the proposed construction. Any remaining underground utilities should be relocated to at least 10 feet outside the perimeter of the proposed building footprints. The abandoned lines should then be excavated and removed from the area of the proposed construction. All excavations should be subsequently backfilled with properly compacted engineered fill. We do not recommend active or non-active utility lines located below the area of the proposed structures be left in place. Any abandoned utility pipes, if left in place and outside of the proposed building footprint, should be filled-in under pressure with cement grout having a minimum 28-day compressive strength of 500 pounds per square inch (psi). This would prevent localized cave-in upon eventual deterioration and loss of structural integrity of the pipe.

The existing topsoil, vegetation and trees including their root mat should also be removed from the area of the proposed construction. Removal of trees should include removal of their root ball, which may extend to several feet below grade.

After lowering the site grade where planned and prior to placement of engineered fill or commencement of construction, areas to receive fill, foundations, slabs, and pavements, including the area of the proposed structure, should be proofrolled with a fully loaded tandem-axle dump truck. Proofrolling should be performed under the observation of the Geotechnical Engineer or his representatives so that areas which exhibit “pumping” (wave type displacement) during proofrolling may be treated by a method recommended by the Geotechnical Engineer. This method may consist of undercutting, and backfilling

with suitable engineered fill, replacing with surge stone, and a layer of crusher run, or some other method that is deemed suitable.

6.3 Caving Considerations

All excavations should be conducted in accordance with the Occupational Safety and Health Administration (OSHA) guidelines. Flattening of the excavation sidewalls and/or the use of bracing may be needed to maintain stability during construction.

6.4 Difficult Excavation

Partially Weathered Rock (PWR) was encountered in all the borings starting at depths ranging from 3 to 13 feet. Auger refusal was encountered in all the borings at depths ranging from 4.5 to 15 feet. Because of the relatively shallow depths at which PWR and auger refusal were encountered, significant difficult excavation conditions (ripping and blasting in mass excavation and blasting for trench/utility excavations) associated with PWR or rock should be expected for excavations at this site.

Site grades and building configurations should be kept as high as possible to limit the impact of difficult excavation. However, because of the relatively shallow levels at which these materials were encountered, we expect that that excavation of PWR and rock will also be required during mass site grading and to facilitate foundation construction. We recommend that PWR and rock, where present, be over excavated to at least 12 inches below building and retaining wall foundation bearing depths, or to a depth below utility trench invert elevations, and replaced with engineered fill. This will allow for foundations and utilities to be installed with conventional light construction equipment, and help reduce the potential for differential foundation settlement.

It is also important to note that depths to PWR and rock can vary over short horizontal distances in the Piedmont geologic area, and PWR and rock could be encountered during construction at shallower depths between and outside the boring locations for this study.

PWR typically requires loosening by ripping with large dozers pulling single tooth rippers in mass excavation. The use of specialized excavation equipment (such as ram-hoes, jackhammers, or possibly blasting) is typically required for PWR excavation in confined (trench) excavations. Relatively sound, massive, rock typically requires blasting for removal in mass or trench excavation.

Excavation techniques will vary based on the weathering of the materials, fracturing and jointing in the rock, and the overall stratigraphy of the feature. Actual field conditions usually display a gradual weathering progression with poorly defined and uneven boundaries between layers of different materials. We recommend that the following definitions for rock in earthwork excavation be included in bid documents:

1. General Excavation: Any material occupying an original volume of more than 1 cubic yard which cannot be excavated with a single-tooth ripper drawn by a crawler tractor having a minimum draw bar pull rating of not less than 80,000 lbs. usable pull (Caterpillar D-8 or larger).

2. Trench Excavation: Any material occupying an original volume of more than 1/2 cubic yard which cannot be excavated with a backhoe having a bucket curling force rated at not less than 40,000 lbs., using a rock bucket and rock teeth (John Deere 790 or larger).

Removal of rock by blasting can be very expensive. The costs of excavation vary with the type of material encountered and the quantities to be excavated. Hence, control of quantities is important. You may consider independent recording of the blasting contractors air track drilling in order to have independent verification of quantities. We will be happy to assist as requested by you with this undertaking.

6.5 Earthwork

The onsite soils, if free of organic and other deleterious materials, should generally be suitable for reuse as engineered fill with proper moisture control. Partially weathered rock (PWR) can be used as engineered fill if it breaks up sufficiently to meet gradation requirements. PWR can also be mixed with soil to meet gradation requirements. Because less than about 5 feet of fill placement is anticipated, blast rock should not be used as fill for this project.

Due to the presence of high silt contents, some of the onsite soil may be sensitive to moisture variation. During rainy seasons, these soils will be difficult to dry. As a practical consideration during extended periods of wet weather, wet onsite soils may need to be discarded and replaced with drier soils. These soils should be placed within a narrow range of their optimum moisture content (typically within about 3 percent of optimum moisture) to achieve proper compaction. Typical restrictions on suitable fill are no organics, plasticity index less than 25, and maximum particle size of four inches, with not more than 30 percent greater than 3/4-inch. These restrictions should also be applied to imported borrow soils if needed.

Positive drainage should be maintained at all times to prevent saturation of exposed soils in case of sudden rains. Rolling the surface of disturbed soils will also improve runoff and reduce the soil moisture and construction delays. The degree of soil stability problems will also be dependent upon the precautions taken by the contractor to help protect the soils from saturation during construction.

6.6 Groundwater Considerations

Groundwater was not encountered in the borings at the time of drilling. Shallow groundwater is not expected to significantly impact mass grading. However, due to the presence of fill and soils containing high silt content, the site is susceptible to formation of perched water after rainfall. The contractor should be prepared to remove perched water and/or groundwater as needed.

6.7 Slopes

The topography at the site is gently sloping down from the southeast areas toward the northwest. We recommend that where fill is to be placed on existing slopes or gullies greater than 4(H):1(V), the slopes be benched to prevent sliding of the fill mass along the existing surface. This can be achieved by notching the slope face by at least about two feet horizontally with the compactor blade as each lift is compacted. A typical benching detail is provided in The Appendix.

Permanent slopes should be constructed no steeper than 2(H):1(V). Fill slopes of up to 20 feet in total height constructed to 2(H):1(V) should be acceptable for this project, assuming proper benching, and placement and compaction of engineered fill. Fill slopes greater than 20 feet must be designed by a licensed professional engineer, and global stability evaluated. If less than desirable soils, such as topsoil or wet soils are to be wasted on slopes, or if an appropriate level of quality control and compaction testing under the supervision of the geotechnical engineer is not planned during slope construction, 2(H):1(V) slopes will not be adequate and flatter slopes should be considered.

All slopes should be protected from erosion during construction and provided with appropriate permanent vegetation or other cover after construction. Slopes should be protected from concentrated run-off flow by means of berms and drainage ditches to direct runoff around slopes or through concrete channels. Appropriate vegetative cover should consist of fast growing grasses that will rapidly create a dense root mat over the entire slope. Landscaping consisting of isolated shrubs and pine straw will not provide adequate slope protection.

A minimum building or retaining wall setback (from the nearest edge of foundations) of at least 10 feet from the crest of slopes is recommended. A minimum setback of 5 feet is recommended for pavement and curbs.

6.8 Foundation Design and Construction

Following site preparation as recommended, the proposed maintenance building can be supported on a shallow foundation system. The shallow foundations may consist of shallow strip and/or isolated column footings supported within and underlain by suitable bearing soils. Based on the subsurface exploration data obtained, a maximum net allowable soil bearing pressure of 3,000 pounds per square foot (psf) is recommended for foundation design. We expect that maximum total and differential foundation settlement will be on the order of 1.0 and 0.5 inches respectively. Due to the presence of existing, undocumented fill, some localized excavation and replacement of soft or otherwise unsuitable fill from below the foundation bearing locations may be required in order for shallow foundations to be feasible.

As mentioned previously, <u>we recommend that PWR and rock, where present in the building areas, be over excavated to at least 12 inches below foundation bearing depths, or to a depth below utility trench invert elevations, and replaced with engineered fill.</u> This will allow for foundations and utilities to be installed with conventional light construction equipment, and help reduce the potential for differential foundation settlement.

We recommend minimum footing dimensions of 20 inches for strip footings and 24 inches for square footings. Footings should bear at least 12 inches below outside finished grades for frost protection. The Geotechnical Engineer must evaluate each footing excavation prior to steel reinforcement or concrete placement. Conditions that are observed should be compared to the test boring data and design requirements. If unsuitable bearing material is encountered, it should be excavated and replaced or otherwise treated as recommended by the Geotechnical Engineer.

Surface water control should be maintained to prevent accumulation of water in footing excavations. Standing water in footing excavations should be removed promptly. Soil softened by the water should be removed, and the Geotechnical Engineer or his representative should reexamine the area.

6.9 Ground Floor Slabs

A slab-on-grade may be utilized for the structure. We recommend a subgrade modulus of 120 pounds per cubic inch (pci) be used for slab design. It has been our experience that the floor slab subgrade is often disturbed by weather, foundation and utility line installation, and other construction activities between completion of grading and slab construction. For this reason, our geotechnical engineer should evaluate the subgrade immediately prior to placing the concrete. Areas judged by the geotechnical engineer to be unstable should be redensified or undercut and replaced with engineered fill compacted to at least 98 percent of its Standard Proctor maximum dry density.

6.10 Retaining Walls

The following retaining wall recommendations pertain to cast-in-place building and site retaining walls and are not intended for modular block or MSE walls. If modular block or MSE walls are planned on the site, United Consulting should be notified because additional evaluation will be required to provide recommendations specific to the planned wall types and locations.

The design of retaining walls must include the determination of the lateral pressure that will act on the wall. The lateral earth pressure is a function of the soil properties, surcharge loads behind the wall, and amount of deformation that the wall can undergo. This deformation is basically dependent upon the relative rigidity of the wall system.

The active earth pressure condition develops when the wall moves away from the soil over a sufficient distance, such as for a freestanding cantilever wall. The at-rest condition exists when there is no lateral strain on the soil, such as walls, which are rigidly restrained like a basement or sub-foundation wall. The passive condition occurs when the wall moves into the soil.

The following equivalent fluid pressures are recommended for three earth pressure conditions.

Table 1 - Lateral Earth Pressures

Earth Pressure Condition	Earth Pressure Coefficient	Recommended Equivalent Fluid Pressure
Active	$K_A = 0.33$	40 psf/foot
At-Rest	$K_O = 0.50$	60 psf/foot
Passive	$K_P = 3.00$	360 psf/foot

We note that considerable horizontal deflections are required to mobilize the passive pressure; therefore, the designer should consider a safety factor of 2 to the stated ultimate passive earth pressure in design.

The recommended equivalent fluid pressures are based on an assumed soil density of 120 pcf, an internal friction angle of 30 degrees and cohesion of zero. A coefficient of friction of 0.36 for sliding may be used for the retaining wall design.

The parameters listed above are based on a level properly compacted backfill, no friction at the wall-soil interface, and no surcharge effects. For design of retaining walls, which could be inundated, the buoyant unit weight of the inundated soil should be used to determine the lateral earth pressure. The hydrostatic pressure based on the maximum ponding elevation should be utilized in the analysis.

Heavy compaction equipment should not be used to compact backfill within 5 feet laterally behind any retaining wall unless the wall is designed for the increased pressure or temporarily braced. Therefore, light compaction equipment may be required in this zone. Retaining wall backfill should be compacted to 95 percent of the Standard Proctor maximum dry density. A permanent drainage system such as a footing drain, or a fabric drain such as Enka drain, Mira drain, etc., is recommended for any retaining walls which are more than 5 feet in height.

The retaining walls should be designed by a professional engineer familiar with retaining wall design and registered in Georgia. Global stability should be determined, and the designer should consider sloping backfill, surcharges and other factors affecting wall loadings.

6.11 Fill Placement

Moisture-density determinations should be performed for each soil type used to provide data necessary for quality assurance testing. The natural moisture content at the time of compaction should be within moisture content limits, which will allow the required compaction to be obtained. This is generally within three percentage points of the optimum moisture. The contractor should be prepared to increase or decrease soil water content as needed to achieve the required degrees of compaction.

The fill should be placed in thin lifts (not to exceed 8-inch loose thickness) and compacted. We recommend the fill be compacted to at least 98 percent of Standard Proctor (ASTM D 698) maximum dry density within top two feet and at least 95 percent of Standard Proctor maximum dry density elsewhere on the site.

A Geotechnical Engineer on a full-time basis should observe grading operations. In-place density tests taken by that individual will assess the degree of compaction being obtained. The frequency of the testing should be determined by the Geotechnical Engineer.

6.12 Seismic Site Class

United Consulting utilized available geotechnical information (N-values) and our experience with the similar soil conditions to provide a seismic site class for the Site. United Consulting recommends that a seismic site classification of “Site Class C” be utilized for the site.

A site class determination based on the average N values is necessarily conservative. A site-specific geophysical study acquiring soil shear wave velocity data may or may not demonstrate sufficient stiffness to allow a higher site class. Shear wave velocity measurements were beyond our authorized scope of work. United Consulting will be pleased to provide the additional seismic services, if requested.

7.0 LIMITATIONS

This report is for the exclusive use of **Engineering Strategies, Inc.,** and the designers of the project described herein, and may only be applied to this specific project. Our conclusions and recommendations have been prepared using generally accepted standards of Geotechnical Engineering practice in the State of Georgia. No other warranty is expressed or implied. Our firm is not responsible for conclusions, opinions or recommendations of others.

The right to rely upon this report and the data within may not be assigned without UNITED CONSULTING'S written permission.

The scope of this evaluation was limited to an evaluation of the load-carrying capabilities and stability of the subsoils. Oil, hazardous waste, radioactivity, irritants, pollutants, molds, or other dangerous substance and conditions were not the subject of this study. Their presence and/or absence are not implied or suggested by this report, and should not be inferred.

Our conclusions and recommendations are based upon design information furnished to us, data obtained from the previously described exploration and testing program and our past experience. They do not reflect variations in subsurface conditions that may exist intermediate of our borings, and in unexplored areas of the site. Should such variations become apparent during construction, it will be necessary to re-evaluate our conclusions and recommendations based upon "on-site" observations of the conditions.

If the design or location of the project is changed, the recommendations contained herein must be considered invalid, unless our firm reviews the changes and our recommendations are either verified or modified in writing. When design is complete, we should be given the opportunity to review the foundation plan, grading plan, and applicable portions of the specifications to confirm that they are consistent with the intent of our recommendations.

UNITED CONSULTING

APPENDIX

General Notes/Narrative of Drilling Operations
Figure 1 – Boring Location Plan
Exploration Procedures
SPT Boring Logs (8)
Typical Benching Detail
Typical Retaining Wall Drainage Detail

GENERAL NOTES

The soil classifications noted on the Boring Logs are visual classifications unless otherwise noted. Minor constituents of a soil sample are termed as follows:

Trace	0 - 10%
Some	11 - 35%
Suffix "y" or "ey"	36 - 49%

LEGEND

Split Spoon Sample obtained during Standard Penetration Testing

Relatively Undisturbed Shelby Tube Sample

Groundwater Level at Time of Boring Completion

Groundwater Level at 24 hours (or as noted) after Termination of Boring

w	Natural Moisture Content	
LL	Liquid Limit	
PL	Plastic Limit	Atterberg Limits
PI	Plasticity Index	
PF	Percent Fines (Percent Passing #200 Sieve)	
γ_d	Dry Unit Weight (Pounds per Cubic Foot or PCF	
γ_m	Moist or In-Situ Unit Weight (PCF)	
γ_{sat}	Saturated Unit Weight (PCF)	

BORING LOG DATA AND NARRATIVE OF DRILLING OPERATIONS

The test borings were made by mechanically advancing helical hollow stem augers into the ground. Samples were covered at regular intervals in each of the borings following established procedures for performing the Standard Penetration Test in accordance with ASTM Specification D-1586. Soil samples were obtained with a standard 1.4" I.D. x 2.0" O.D. split barrel sampler. The sampler is first seated 6" to penetrate any loose cuttings and then driven an additional foot with the blows of a 140 pound hammer freely falling a distance of 30". The number of blows required to drive the sampler each six inches is recorded on the Boring Logs. The total number of blows required to drive the sampler the final foot is designated the "standard penetration resistance." This driving resistance, known as the "N" value, is a measure of the relative density of granular soils and is an indication of the consistency of cohesive deposits.

The Following table describes soil consistencies and relative densities based on standard-penetration resistance values (N) determined by the Standard Penetration Test.

	"N"	Consistency
	0-2	Very Soft
	3-4	Soft
	5-8	Firm
Clay and Silt	9-15	Stiff
	16-30	Very Stiff
	Over 31	Hard

	"N"	Relative Density
	0-4	Very Loose
	5-10	Loose
	11-19	Firm
Sand	20-29	Medium Dense
	30-49	Dense
	50+	Very Dense

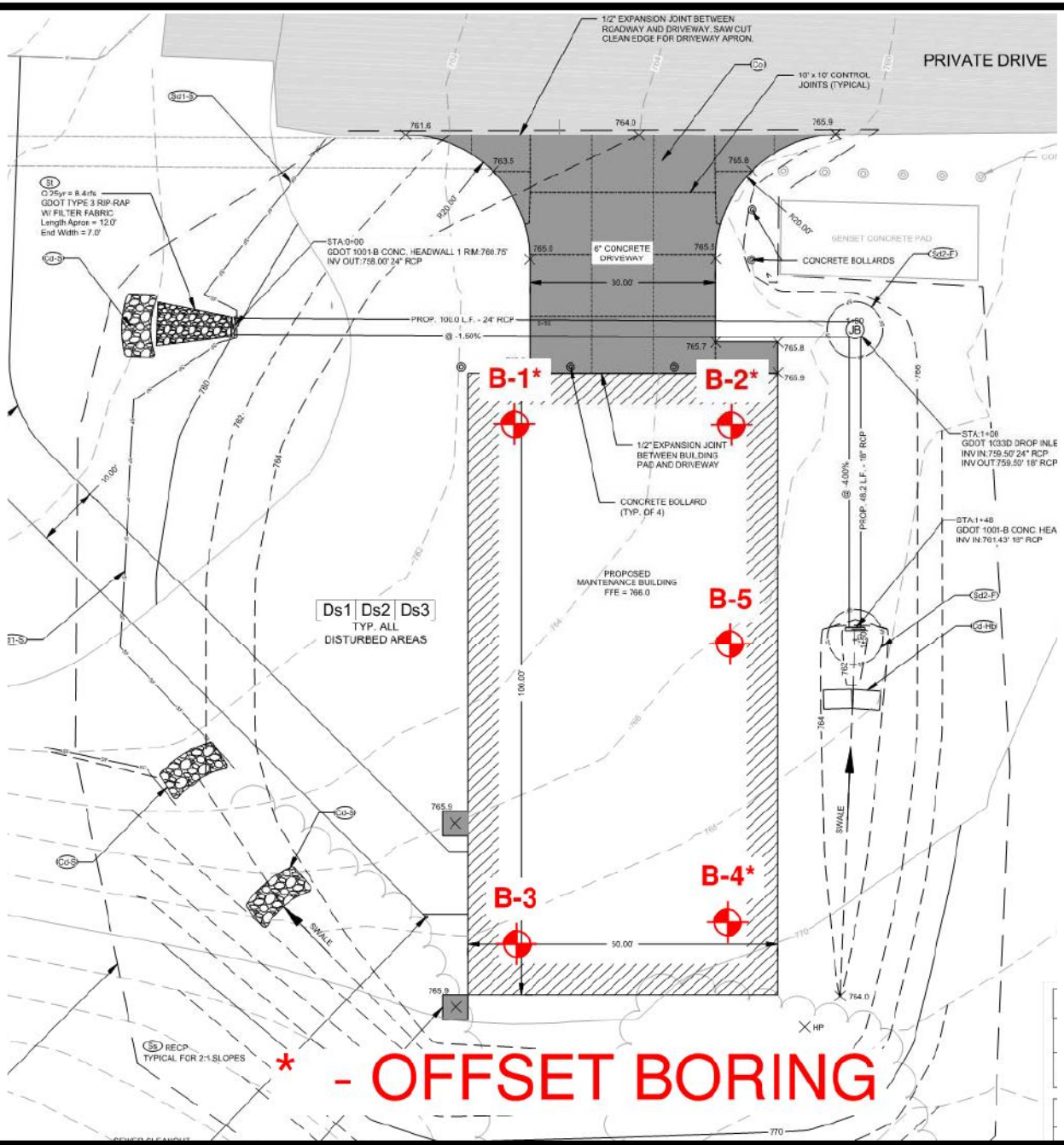

We're here for you UNITED CONSULTING	N	Scale:	NTS	Notes	Client: Engineering Strategies, Inc.
		Prepared:	SRT		Site: New Maintenance Building, Rockdale County Water Treatment Plant, 3090 Gees Mill Rd, Conyers, Rockdale County, GA
		Checked:	MAK		
		Project No.:	ENGSI-18-GA-02751-01		Title: Boring Location Plan

FIG. 1

EXPLORATION PROCEDURES

Five (5) SPT borings (designated B-1 through B-5) and three (3) offset borings were performed at the approximate locations indicated on the attached Boring Location Plan (Figure 1). The SPT borings were performed in general accordance with ASTM D 1586. Soil samples obtained during testing were visually evaluated by the Project Engineer and classified according to the visual-manual procedure described in ASTM D 2488. A narrative of field operations is included in The Appendix.

The test locations in the field were determined by the Project Engineer by measuring distances and estimating angles from existing site features. The test locations should, therefore, be considered approximate.

UNITED CONSULTING
625 HOLCOMB BRIDGE ROAD
NORCROSS, GEORGIA 30071
(770)209-0029, FAX (770)582-2800

BORING LOG

CONTRACTED WITH: Engineering Strategies, Inc. BORING NO.: B-1
PROJECT NAME: New Maintenance Building DATE: 10/16/18
JOB NO.: ENGSI-18-GA-02751-01 DRILLER: Big Dog RIG: Diedrich D-50 LOGGED BY: SRT

FFE= 766

ELEV.	DESCRIPTION	DEPTH in FEET	SAMPLES NO.	TYPE	BLOWS/6"	N VALUE	RECOV.	W	NOTES
	Topsoil	0							
	Silt - some mica, trace sand, clay, roots, and rock fragments; firm; red brown (Fill)		1		3-4-3	7	14		Automatic Hammer Hammer Efficiency=86% to 98&
760									
	- sandy, trace wood pieces, no mica; dark gray	5	2		1-3-3	6	6		
755									
	Partially Weathered Rock sampled as: Sand - mostly rock fragments, some silt, trace mica; very dense; orange-brown-white (Residual)	10	3		8-29-50/4"	50/4"	14		
	AUGER REFUSAL AT 11 FEET								Hard Drilling Groundwater was not encountered at the time of drilling.
750									
		15							
745									
		20							
740									
		25							
735									
		30							
730									
		35							
725									
		40							

UNITED CONSULTING
625 HOLCOMB BRIDGE ROAD
NORCROSS, GEORGIA 30071
(770)209-0029, FAX (770)582-2800

BORING LOG

CONTRACTED WITH: Engineering Strategies, Inc. BORING NO.: B-1A
PROJECT NAME: New Maintenance Building DATE: 10/16/18
JOB NO.: ENGSI-18-GA-02751-01 DRILLER: Big Dog RIG: Diedrich D-50 LOGGED BY: SRT

FFE= 766

ELEV.	DESCRIPTION	DEPTH in FEET	SAMPLES NO.	TYPE	BLOWS/6"	N VALUE	RECOV.	W	NOTES
	Gravel+Topsoil	0							
	Silt - trace roots, mica, and wood pieces; firm; red brown (Fill)		1		3-3-4	7	14		Offset 10' South of B-1 Automatic Hammer Hammer Efficiency=86% to 98&
760									
	- some clay, no mica; dark gray	5	2		2-2-5	7	16		
755									
	Partially Weathered Rock sampled as: Sand - mostly rock fragments; very dense; white (Residual)	10	3		50/6"	50/6"	2		Hard Drilling Groundwater was not encountered at the time of drilling.
	AUGER REFUSAL AT 10 FEET								
750									
		15							
745									
		20							
740									
		25							
735									
		30							
730									
		35							
725									
		40							

UNITED CONSULTING
625 HOLCOMB BRIDGE ROAD
NORCROSS, GEORGIA 30071
(770)209-0029, FAX (770)582-2800

BORING LOG

CONTRACTED WITH: Engineering Strategies, Inc. BORING NO.: B-2
PROJECT NAME: New Maintenance Building DATE: 10/16/18
JOB NO.: ENGSI-18-GA-02751-01 DRILLER: Big Dog RIG: Diedrich D-50 LOGGED BY: SRT

FFE= 766

ELEV.	DESCRIPTION	DEPTH in FEET	SAMPLES NO.	TYPE	BLOWS/6"	N VALUE	RECOV.	W	NOTES
	Gravel+Topsoil	0							
765	Silt - some sand and mica; firm; red brown (Fill)		1		3-3-3	6	10		Automatic Hammer Hammer Efficiency=86% to 98&
	- some clay, trace root hair; dark brown		2		3-7-7	14	8		
760	Sand - trace silt and rock fragments; firm; gray-brown (Residual)	5							Hard Drilling
	Partially Weathered Rock sampled as: Sand - mostly rock fragments; very dense; gray-white		3		50/5"	50/5"	1		Groundwater was not encountered at the time of drilling.
	AUGER REFUSAL AT 6.5 FEET								
755		10							
750		15							
745		20							
740		25							
735		30							
730		35							
725		40							

UNITED CONSULTING
625 HOLCOMB BRIDGE ROAD
NORCROSS, GEORGIA 30071
(770)209-0029, FAX (770)582-2800

BORING LOG

CONTRACTED WITH: Engineering Strategies, Inc. BORING NO.: B-2A
PROJECT NAME: New Maintenance Building DATE: 10/16/18
JOB NO.: ENGSI-18-GA-02751-01 DRILLER: Big Dog RIG: Diedrich D-50 LOGGED BY: SRT

FFE= 766

ELEV.	DESCRIPTION	DEPTH in FEET	SAMPLES NO.	TYPE	BLOWS/6"	N VALUE	RECOV.	W	NOTES
	Topsoil	0							
765	Silt - some sand and mica, trace clay; firm; red brown (Fill)		1		2-3-3	6	8		Offset 10' South of B-2
									Automatic Hammer Hammer Efficiency=86% to 98&
	- some clay, trace root hair; dark brown		2		2-3-50/3"	50/3"	12		
760	Partially Weathered Rock sampled as: Sand - trace rock fragments; very dense; gray-brown (Residual)	5							Hard Drilling
	AUGER REFUSAL AT 6.5 FEET								Groundwater was not encountered at the time of drilling.
755		10							
750		15							
745		20							
740		25							
735		30							
730		35							
725		40							

UNITED CONSULTING
625 HOLCOMB BRIDGE ROAD
NORCROSS, GEORGIA 30071
(770)209-0029, FAX (770)582-2800

BORING LOG

CONTRACTED WITH: Engineering Strategies, Inc. BORING NO.: B-3
PROJECT NAME: New Maintenance Building DATE: 10/16/18
JOB NO.: ENGSI-18-GA-02751-01 DRILLER: Big Dog RIG: Diedrich D-50 LOGGED BY: SRT

ELEV.	DESCRIPTION	DEPTH in FEET	SAMPLES NO.	TYPE	BLOWS/6"	N VALUE	RECOV.	W	NOTES
770	Topsoil	0							
	Sand - some rock fragments, trace silt and clay; medium dense; red brown (Fill)		1		7-10-11	21	10		Automatic Hammer Hammer Efficiency=86% to 98&
FFE= 766									
765	Partially Weathered Rock sampled as: Sand - some rock fragments, trace silt and mica; very dense; gray-white (Residual)	5	2		5-22-50/1"	50/1"	8		
760	- gray-brown with orange intrusions	10	3		6-50/5"	50/5"	4		
									Hard Drilling
755		15	4		50/0"	50/0"	0		No Recovery
	AUGER REFUSAL AT 15 FEET								Groundwater was not encountered at the time of drilling.
750		20							
745		25							
740		30							
735		35							
730		40							

UNITED CONSULTING
625 HOLCOMB BRIDGE ROAD
NORCROSS, GEORGIA 30071
(770)209-0029, FAX (770)582-2800

BORING LOG

CONTRACTED WITH: Engineering Strategies, Inc. BORING NO.: B-4
PROJECT NAME: New Maintenance Building DATE: 10/16/18
JOB NO.: ENGSI-18-GA-02751-01 DRILLER: Big Dog RIG: Diedrich D-50 LOGGED BY: SRT

ELEV.	DESCRIPTION	DEPTH in FEET	SAMPLES NO.	TYPE	BLOWS/6"	N VALUE	RECOV.	W	NOTES
770	Topsoil	0							
	Sand - some rock fragments, trace silt and mica; dense; gray-orange-brown (Residual)		1		16-27-16	43	16		Automatic Hammer Hammer Efficiency=86% to 98&
FFE= 766									
765	Partially Weathered Rock sampled as: Sand - mostly rock fragments; very dense; white	5	2		50/3"	50/3"	3		Hard Drilling Groundwater was not encountered at the time of drilling.
	AUGER REFUSAL AT 4.5 FEET								
760		10							
755		15							
750		20							
745		25							
740		30							
735		35							
730		40							

UNITED CONSULTING
625 HOLCOMB BRIDGE ROAD
NORCROSS, GEORGIA 30071
(770)209-0029, FAX (770)582-2800

BORING LOG

CONTRACTED WITH: Engineering Strategies, Inc. BORING NO.: B-4A
PROJECT NAME: New Maintenance Building DATE: 10/16/18
JOB NO.: ENGSI-18-GA-02751-01 DRILLER: Big Dog RIG: Diedrich D-50 LOGGED BY: SRT

ELEV.	DESCRIPTION	DEPTH in FEET	SAMPLES NO.	TYPE	BLOWS/6"	N VALUE	RECOV.	W	NOTES
770	Grass+Topsoil	0							
	Sand - some silt, trace rock fragments and mica; firm; orange-brown (Residual)		1		7-6-13	19	14		Offset 10' North of B-4
FFE= 766									Automatic Hammer Hammer Efficiency=86% to 98&
765	- some mica; orange-yellow-brown	5	2		5-7-9	16	12		
760	- gray-orange-brown	10	3		3-8-11	19	14		
755	Partially Weathered Rock sampled as: Sand - mostly rock fragments; very dense; white	15	4		50/2"	50/2"	2		Groundwater was not encountered at the time of drilling.
	AUGER REFUSAL AT 14 FEET								
750		20							
745		25							
740		30							
735		35							
730		40							

UNITED CONSULTING
625 HOLCOMB BRIDGE ROAD
NORCROSS, GEORGIA 30071
(770)209-0029, FAX (770)582-2800

BORING LOG

CONTRACTED WITH: Engineering Strategies, Inc. BORING NO.: B-5
PROJECT NAME: New Maintenance Building DATE: 10/16/18
JOB NO.: ENGSI-18-GA-02751-01 DRILLER: Big Dog RIG: Diedrich D-50 LOGGED BY: SRT

ELEV.	DESCRIPTION	DEPTH in FEET	SAMPLES NO.	TYPE	BLOWS/6"	N VALUE	RECOV.	W	NOTES
FFE= 766	Topsoil	0							
765	Silt - some sand and mica; stiff; red brown (Fill)		1		3-5-5	10	14		Automatic Hammer Hammer Efficiency=86% to 98&
	- some clay, trace roots and wood piece; dark gray		2		6-34-50/1"	50/1"	10		
760	Partially Weathered Rock sampled as: Sand - mostly rock fragments; very dense; gray-white (Residual)	5							Hard Drilling
	- white		3		50/2"	50/2"	2		
	AUGER REFUSAL AT 9 FEET	10							Groundwater was not encountered at the time of drilling.
755									
		15							
750									
		20							
745									
		25							
740									
		30							
735									
		35							
730									
		40							
725									

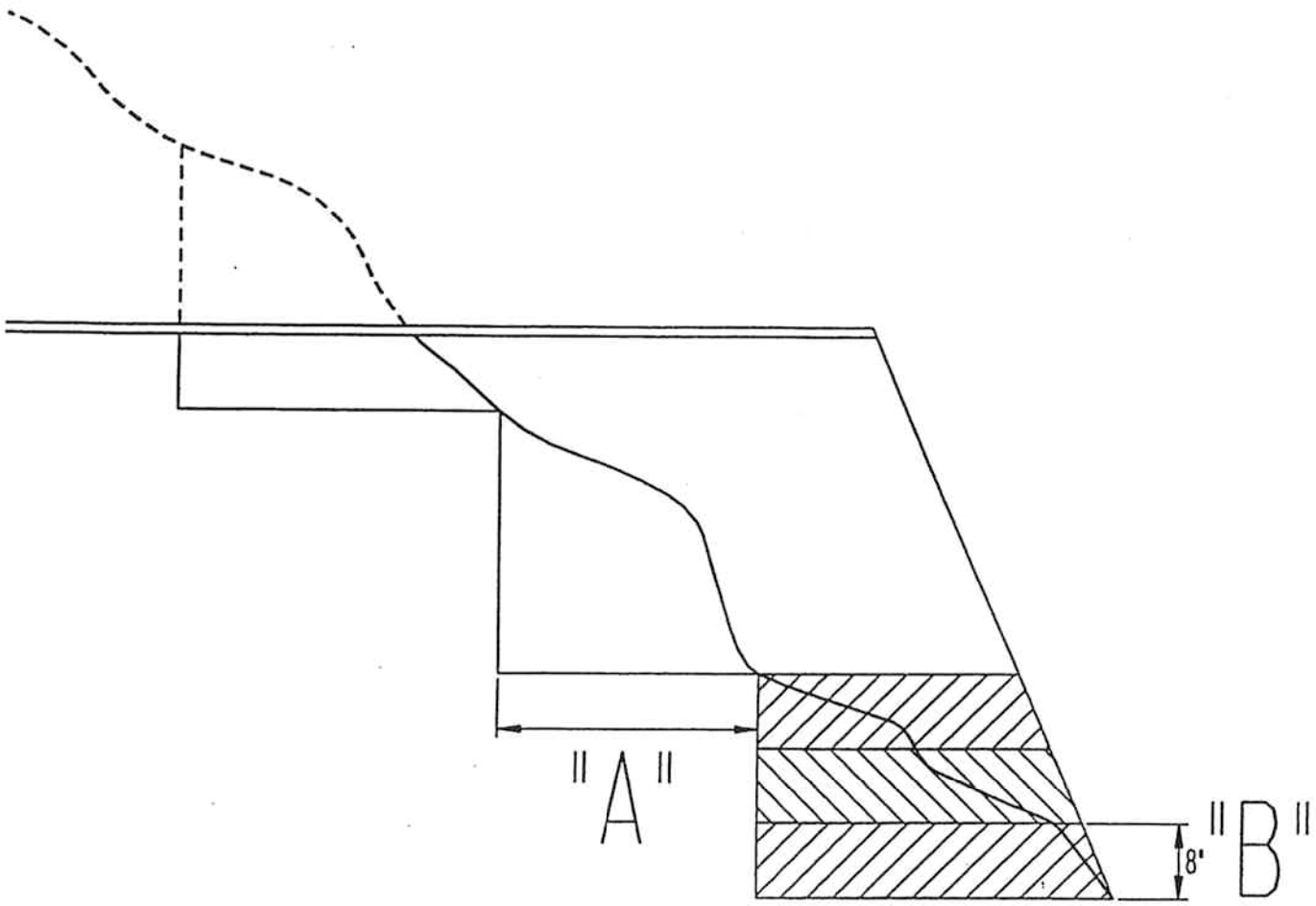

1. THE ABOVE DIAGRAM ILLUSTRATES A TYPICAL BENCHING FOR PLACEMENT OF FILL ON A SLOPING SURFACE.

2. THE DIAGRAM SHOWS THAT BEFORE FILL IS PLACED, THE FIRST STEP IS CUT INTO THE SLOPE A MAXIMUM DISTANCE OF ABOUT 8 FEET 'A' (ABOUT 3/4 THE WIDTH OF USUAL D-8 BULLDOZER BLADE). SUCCESSIVE LAYERS OF FILL ARE THEN PLACED. BEFORE FINAL LAYER IS PLACED, THE SECOND STEP IS CUT 8 FEET INTO THE SLOPE AND SUCCESSIVE LAYERS ARE AGAIN PLACED.

3. SELECT FILL MATERIAL SHOULD BE PLACED IN 8 INCH LIFTS AND COMPACTED TO THE SPECIFIED DENSITY ('B').

TYPICAL BENCHING DETAIL

UNITED CONSULTING
625 HOLCOMB BRIDGE ROAD, NORCROSS, GEORGIA 30071
OFFICE (770)-209-0029 FAX (770)-582-2900

UC01 109FD

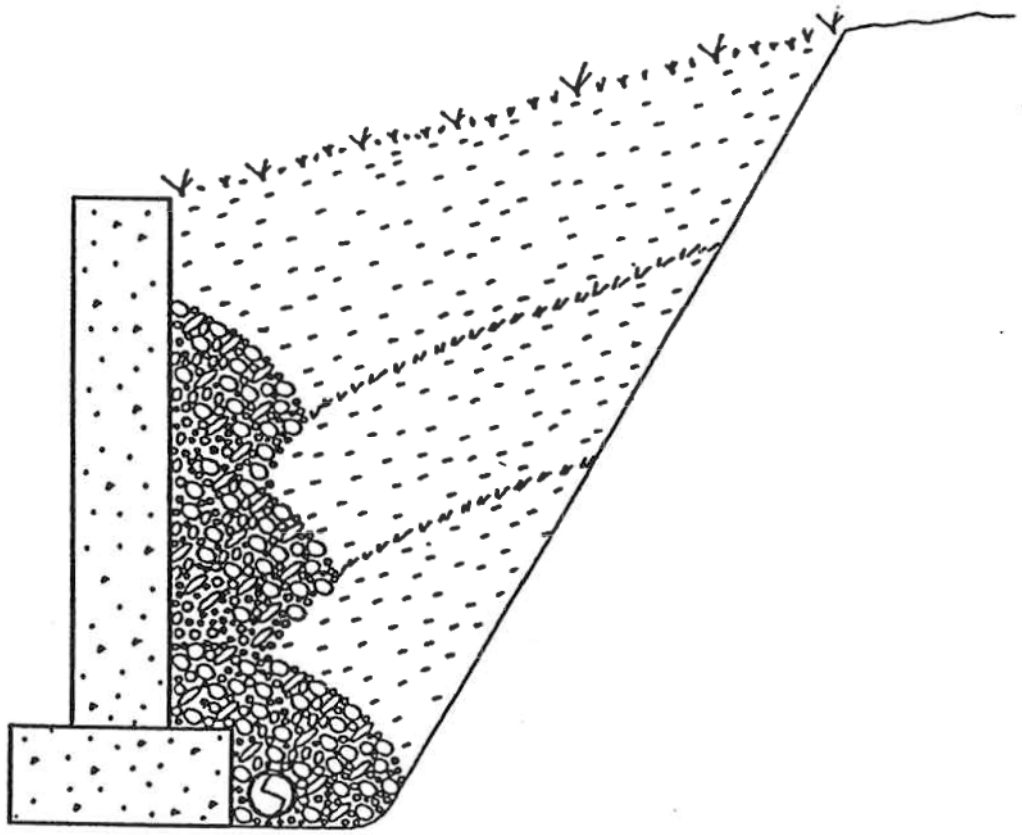

AGGREGATE SYSTEM

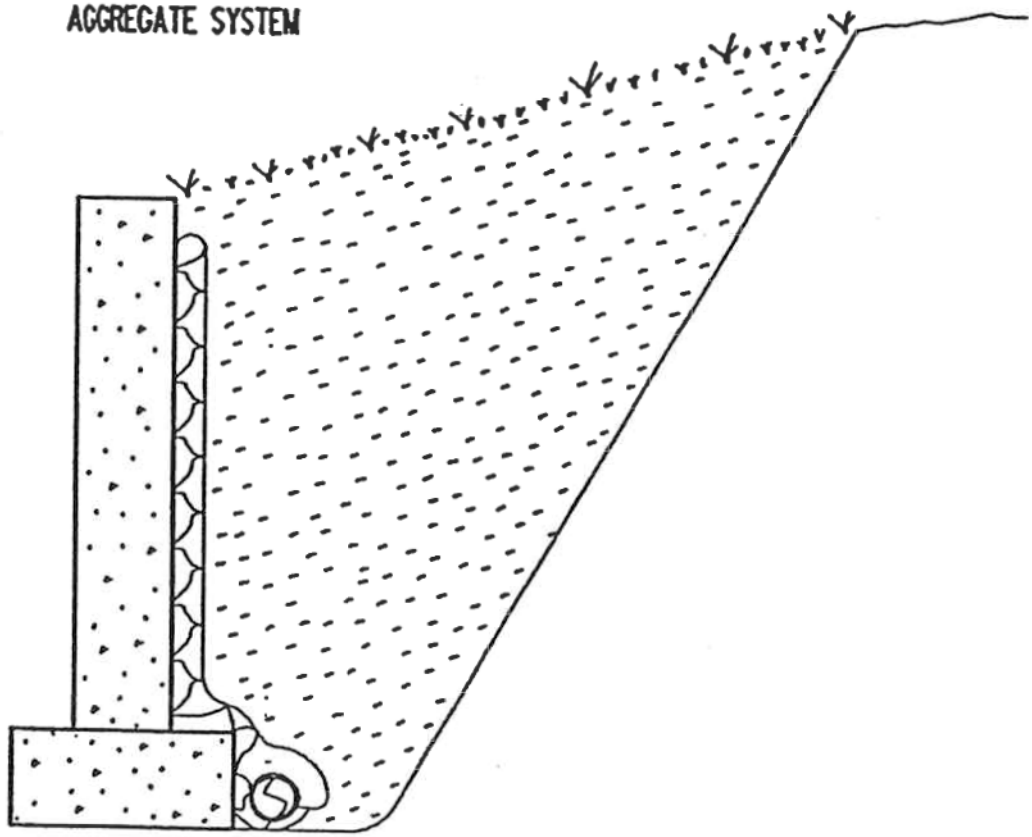

MIRADRAIN SYSTEM

RETAINING WALL
DRAIN DETAIL

UNITED CONSULTING
625 HOLCOMB BRIDGE ROAD, NORCROSS, GEORGIA 30071
OFFICE (770)-209-0029 FAX (770)-582-2900

UCOI BENCH

Important Information about This

Geotechnical-Engineering Report

Subsurface problems are a principal cause of construction delays, cost overruns, claims, and disputes.

While you cannot eliminate all such risks, you can manage them. The following information is provided to help.

Geotechnical Services Are Performed for Specific Purposes, Persons, and Projects

Geotechnical engineers structure their services to meet the specific needs of their clients. A geotechnical-engineering study conducted for a civil engineer may not fulfill the needs of a constructor — a construction contractor — or even another civil engineer. Because each geotechnical- engineering study is unique, each geotechnical-engineering report is unique, prepared *solely* for the client. No one except you should rely on this geotechnical-engineering report without first conferring with the geotechnical engineer who prepared it. *And no one — not even you* — should apply this report for any purpose or project except the one originally contemplated.

Read the Full Report

Serious problems have occurred because those relying on a geotechnical-engineering report did not read it all. Do not rely on an executive summary. Do not read selected elements only.

Geotechnical Engineers Base Each Report on a Unique Set of Project-Specific Factors

Geotechnical engineers consider many unique, project-specific factors when establishing the scope of a study. Typical factors include: the client's goals, objectives, and risk-management preferences; the general nature of the structure involved, its size, and configuration; the location of the structure on the site; and other planned or existing site improvements, such as access roads, parking lots, and underground utilities. Unless the geotechnical engineer who conducted the study specifically indicates otherwise, do not rely on a geotechnical-engineering report that was:

- not prepared for you;
- not prepared for your project;
- not prepared for the specific site explored; or
- completed before important project changes were made.

Typical changes that can erode the reliability of an existing geotechnical-engineering report include those that affect:

- the function of the proposed structure, as when it's changed from a parking garage to an office building, or from a light-industrial plant to a refrigerated warehouse;
- the elevation, configuration, location, orientation, or weight of the proposed structure;
- the composition of the design team; or
- project ownership.

As a general rule, *always* inform your geotechnical engineer of project changes—even minor ones—and request an assessment of their impact. *Geotechnical engineers cannot accept responsibility or liability for problems that occur because their reports do not consider developments of which they were not informed.*

Subsurface Conditions Can Change

A geotechnical-engineering report is based on conditions that existed at the time the geotechnical engineer performed the study. *Do not rely on a geotechnical-engineering report whose adequacy may have been affected by*: the passage of time; man-made events, such as construction on or adjacent to the site; or natural events, such as floods, droughts, earthquakes, or groundwater fluctuations. *Contact the geotechnical engineer before applying this report to determine if it is still reliable.* A minor amount of additional testing or analysis could prevent major problems.

Most Geotechnical Findings Are Professional Opinions

Site exploration identifies subsurface conditions only at those points where subsurface tests are conducted or samples are taken. Geotechnical engineers review field and laboratory data and then apply their professional judgment to render an opinion about subsurface conditions throughout the site. Actual subsurface conditions may differ — sometimes significantly — from those indicated in your report. Retaining the geotechnical engineer who developed your report to provide geotechnical-construction observation is the most effective method of managing the risks associated with unanticipated conditions.

A Report's Recommendations Are Not Final

Do not overrely on the confirmation-dependent recommendations included in your report. *Confirmation-dependent recommendations are not final,* because geotechnical engineers develop them principally from judgment and opinion. Geotechnical engineers can finalize their recommendations *only* by observing actual subsurface conditions revealed during construction. *The geotechnical engineer who developed your report cannot assume responsibility or liability for the report's confirmation-dependent recommendations if that engineer does not perform the geotechnical-construction observation required to confirm the recommendations' applicability.*

A Geotechnical-Engineering Report Is Subject to Misinterpretation

Other design-team members' misinterpretation of geotechnical-engineering reports has resulted in costly

problems. Confront that risk by having your geotechnical engineer confer with appropriate members of the design team after submitting the report. Also retain your geotechnical engineer to review pertinent elements of the design team's plans and specifications. Constructors can also misinterpret a geotechnical-engineering report. Confront that risk by having your geotechnical engineer participate in prebid and preconstruction conferences, and by providing geotechnical construction observation.

Do Not Redraw the Engineer's Logs

Geotechnical engineers prepare final boring and testing logs based upon their interpretation of field logs and laboratory data. To prevent errors or omissions, the logs included in a geotechnical-engineering report should *never* be redrawn for inclusion in architectural or other design drawings. Only photographic or electronic reproduction is acceptable, *but recognize that separating logs from the report can elevate risk.*

Give Constructors a Complete Report and Guidance

Some owners and design professionals mistakenly believe they can make constructors liable for unanticipated subsurface conditions by limiting what they provide for bid preparation. To help prevent costly problems, give constructors the complete geotechnical-engineering report, *but* preface it with a clearly written letter of transmittal. In that letter, advise constructors that the report was not prepared for purposes of bid development and that the report's accuracy is limited; encourage them to confer with the geotechnical engineer who prepared the report (a modest fee may be required) and/or to conduct additional study to obtain the specific types of information they need or prefer. A prebid conference can also be valuable. *Be sure constructors have sufficient time* to perform additional study. Only then might you be in a position to give constructors the best information available to you, while requiring them to at least share some of the financial responsibilities stemming from unanticipated conditions.

Read Responsibility Provisions Closely

Some clients, design professionals, and constructors fail to recognize that geotechnical engineering is far less exact than other engineering disciplines. This lack of understanding has created unrealistic expectations that have led to disappointments, claims, and disputes. To help reduce the risk of such outcomes, geotechnical engineers commonly include a variety of explanatory provisions in their reports. Sometimes labeled "limitations," many of these provisions indicate where geotechnical engineers' responsibilities begin and end, to help others recognize their own responsibilities and risks. *Read these provisions closely.* Ask questions. Your geotechnical engineer should respond fully and frankly.

Environmental Concerns Are Not Covered

The equipment, techniques, and personnel used to perform an *environmental* study differ significantly from those used to perform a *geotechnical* study. For that reason, a geotechnical-engineering report does not usually relate any environmental findings, conclusions, or recommendations; e.g., about the likelihood of encountering underground storage tanks or regulated contaminants. *Unanticipated environmental problems have led to numerous project failures.* If you have not yet obtained your own environmental information, ask your geotechnical consultant for risk-management guidance. *Do not rely on an environmental report prepared for someone else.*

Obtain Professional Assistance To Deal with Mold

Diverse strategies can be applied during building design, construction, operation, and maintenance to prevent significant amounts of mold from growing on indoor surfaces. To be effective, all such strategies should be devised for the *express purpose* of mold prevention, integrated into a comprehensive plan, and executed with diligent oversight by a professional mold-prevention consultant. Because just a small amount of water or moisture can lead to the development of severe mold infestations, many mold- prevention strategies focus on keeping building surfaces dry. While groundwater, water infiltration, and similar issues may have been addressed as part of the geotechnical- engineering study whose findings are conveyed in this report, the geotechnical engineer in charge of this project is not a mold prevention consultant; *none of the services performed in connection with the geotechnical engineer's study were designed or conducted for the purpose of mold prevention. Proper implementation of the recommendations conveyed in this report will not of itself be sufficient to prevent mold from growing in or on the structure involved.*

Rely, on Your GBC-Member Geotechnical Engineer for Additional Assistance

Membership in the Geotechnical Business Council of the Geoprofessional Business Association exposes geotechnical engineers to a wide array of risk-confrontation techniques that can be of genuine benefit for everyone involved with a construction project. Confer with you GBC-Member geotechnical engineer for more information.

GEOTECHNICAL BUSINESS COUNCIL
of the Geoprofessional Business Association

8811 Colesville Road/Suite G106, Silver Spring, MD 20910
Telephone: 301/565-2733 Facsimile: 301/589-2017
e-mail: info@geoprofessional.org www.geoprofessional.org

Copyright 2015 by Geoprofessional Business Association (GBA). Duplication, reproduction, or copying of this document, or its contents, in whole or in part, by any means whatsoever, is strictly prohibited, except with GBA's specific written permission. Excerpting, quoting, or otherwise extracting wording from this document is permitted only with the express written permission of GBA, and only for purposes of scholarly research or book review. Only members of GBA may use this document as a complement to or as an element of a geotechnical-engineering report. Any other firm, individual, or other entity that so uses this document without being a GBA member could be commiting negligent or intentional (fraudulent) misrepresentation.